THE MANIFOLD CENTER

CATALOG NO. 33

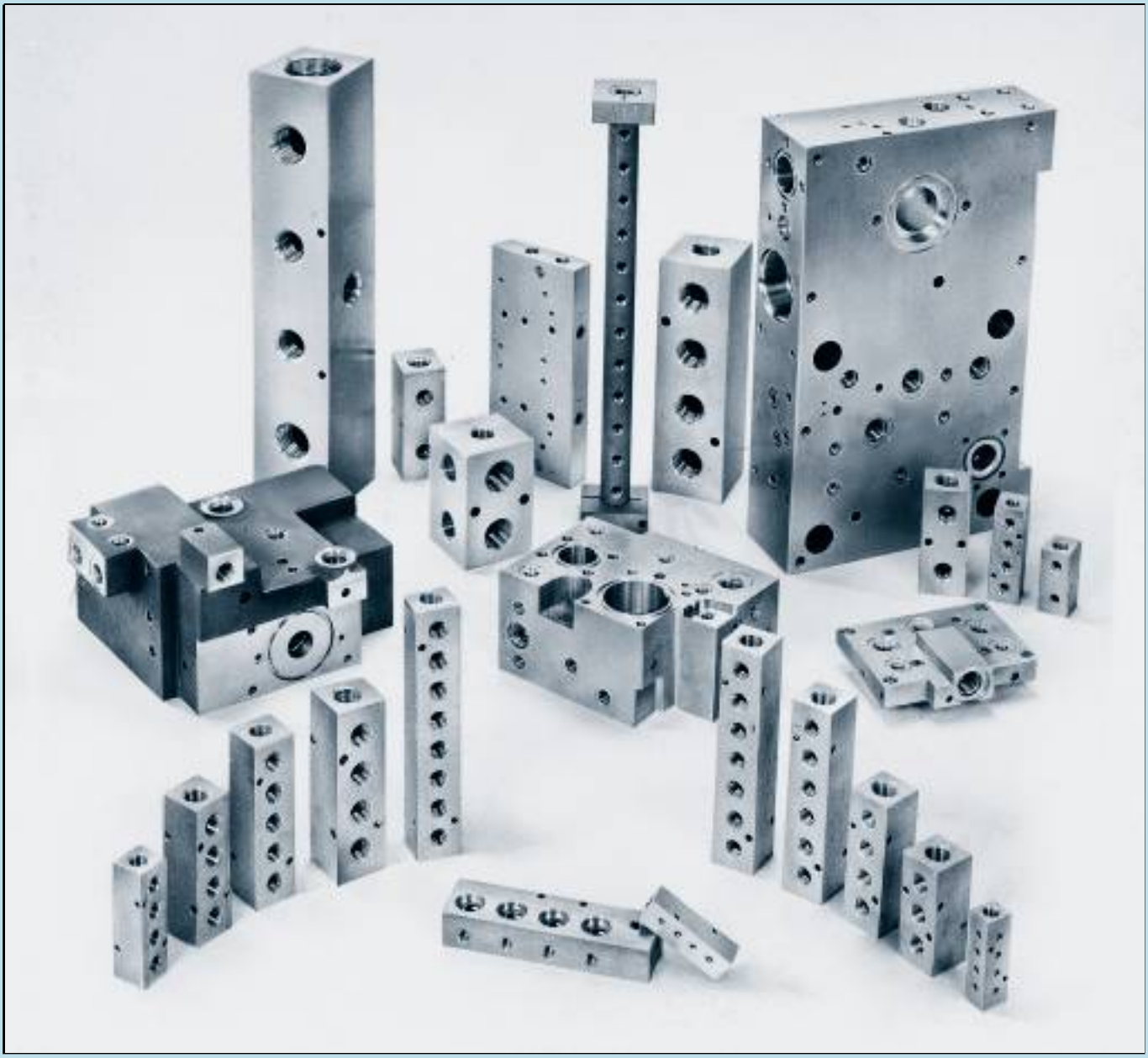

12 COMMERCIAL BLVD.
MEDFORD, N.Y. 11763

TEL.: (631) 736-2275
FAX: (631) 736-2725

WEB: www.manifoldcenter.com
E-MAIL: sales@manifoldcenter.com

TERMS AND CONDITIONS

The policy of B & R Industries, Inc. is to render service to you. At all times we try to maintain sufficient stock of all items so that your orders can be shipped the day received. All orders are subject to acceptance by B & R Industries, Inc.

PRICES: Prices are F.O.B. Medford, N.Y. and subject to change without notice. Shipments will be invoiced on the basis of prices in effect the day of shipment. All quotations are made for immediate acceptance.

FREIGHT: Any item in our literature may be combined with all other B & R Industries, Inc. items for freight purposes.

TERMS: Net 30

MINIMUM ORDERS: A minimum of $50.00 applies to all orders.

RETURNS: Stock items in an unused condition may be returned within 60 days when specifically authorized and is subject to a 20% handling charge. Freight on all returned shipments must be prepaid. And defective through faults of workmanship of material will be replaced or credit will be allowed at invoice price. In no case will we allow for labor or expense of consequential damage.

SHORTAGES: All claims for shortages or overcharges must be made within 10 days of receipt of material. Please reference invoices number when filing a claim.

SALES: All sales, contracts, or agreements made by us are contingent upon strikes, fires, accidents, or other causes beyond our control. Orders for custom items are not subject to cancellation except with written permission and upon the agreement to reimburse us for work already performed. On all orders for custom items, we reserve the right to ship 10% over and under the quantities specified.

LIABILITY: B & R Industries limits it's products to be free of defects in materials and workmanship. No warranty of merchantability or other warranty, expressed or implied, is made. Liability for and the exclusive remedy for defective materials or workmanship is limited to replacement or repair of defective material. In no way is liability extended to consequential damages, work stoppages or end product liability.

SPECIFICATIONS: Published literature at time of initial publication reflects all current design, dimension and performance data. However, in keeping with the policy of upgrading products on an ongoing basis, modifications may result in design, dimension and performance data not printed in this literature. Also, working pressures, corrosion data and other technical information have been prepared from actual test results and other data considered to be reliable. However, no responsibility can be assumed by B & R Industries Inc. for the accuracy of this information under varied field conditions. It should be considered as a recommendation only not a guarantee.

PNEUMATIC - HYDRAULIC MANIFOLDS

SPECIFICATIONS:

Material: Aluminum 6061 - T651
Operating Pressure: 3000 PSI
Standard Ports: NPT or SAE

Alternate Ports: BSPP, BSPT,
Metric 'O' Ring Boss
Alternate Materials: Brass, Steel,
Stainless Steel,
Plastic

NPT - Junction Blocks . . . Page 10 - 11

SAE - Junction Blocks . . . Page 18

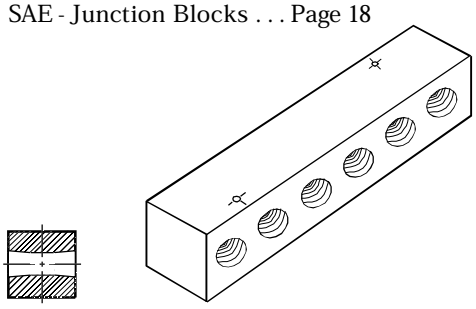

NPT - Single Row Manifolds . . . Page 4 - 5

SAE - Single Row Manifolds . . . Page 15

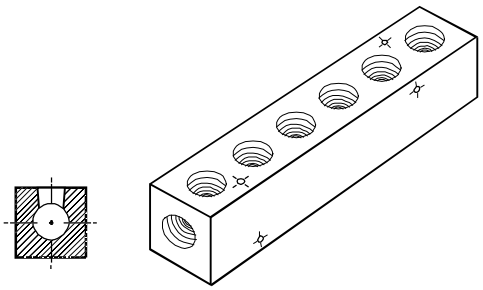

NPT - Right Angle Junction Blocks . . . Page 11 - 12

SAE - Right Angle Junction Blocks . . . Page 19

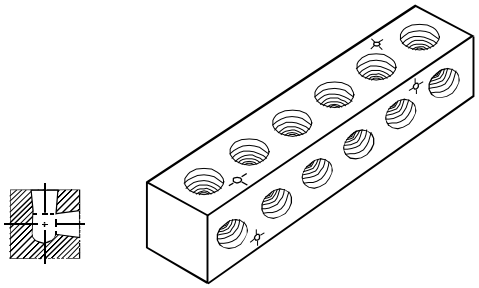

NPT - Double Row Manifolds . . . Page 6 - 7

SAE - Double Row Manifolds . . . Page 16

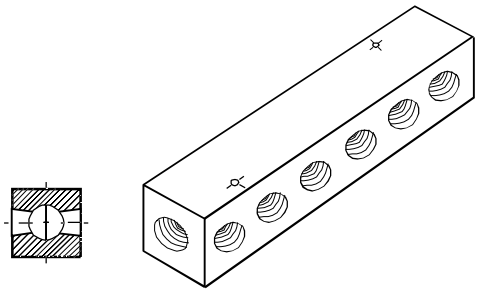

NPT - Terminal Tee Blocks . . . Page 13 - 14

SAE - Terminal Tee Blocks . . . Page 20

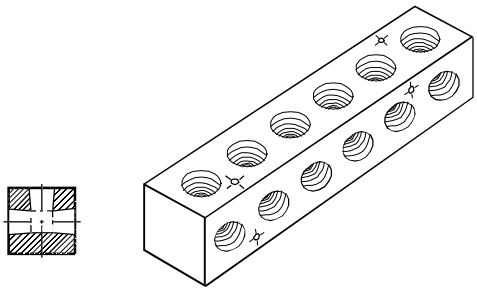

NPT - Right Angle Row Manifolds . . . Page 8 - 9

SAE - Right Angle Row Manifolds . . . Page 17

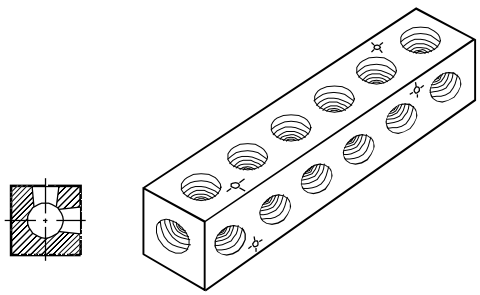

NPT Junction Bars . . . . . Page 14

NPT Right Angle Junction Bars . . . Page 14

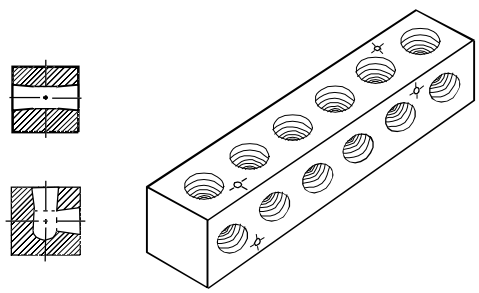

SINGLE ROW MANIFOLDS - NPT PORTING

Requirements not listed are quoted upon request.

NPT PORTING IN / OUT

1/8 / 10-32 NF

SINGLE ROW - PART NO. S 32 -
(10-32 NF - 2B PORTS)

Dash No.	A Ports	A NF	B NPT	C	D	E	F	G DIA.	H	J	K
-4	4	10-32	1/8	.75	2.50	.50	.500	.144	.37	.518	1.000
-6	6	10-32	1/8	.75	3.50	.50	.500	.144	.37	.518	2.000
-8	8	10-32	1/8	.75	4.50	.50	.500	.144	.37	.518	3.000
-10	10	10-32	1/8	.75	5.50	.50	.500	.144	.37	.518	4.000

1/4 / 1/8

SINGLE ROW - PART NO. S 125 -

Dash No.	A Ports	A NPT	B NPT	C	D	E	F	G DIA.	H	J	K
-2	2	1/8	1/4	1.00	1.75	.50	.750	.171	.50	.700	.000
-3	3	1/8	1/4	1.00	2.50	.50	.750	.171	.50	.700	.750
-4	4	1/8	1/4	1.00	3.25	.50	.750	.171	.50	.700	1.500
-5	5	1/8	1/4	1.00	4.00	.50	.750	.171	.50	.700	2.250
-6	6	1/8	1/4	1.00	4.75	.50	.750	.171	.50	.700	3.000
-7	7	1/8	1/4	1.00	5.50	.50	.750	.171	.50	.700	3.750
-8	8	1/8	1/4	1.00	6.25	.50	.750	.171	.50	.700	4.500
-10	10	1/8	1/4	1.00	7.75	.50	.750	.171	.50	.700	6.000

1/4 / 1/8

SINGLE ROW - PART NO. SI 125 -
Increased Center Distance 1.125 Inch

Dash No.	A Ports	A NPT	B NPT	C	D	E	F	G DIA.	H	J	K
-2	2	1/8	1/4	1.00	2.12	.50	1.125	.171	.50	.700	.000
-3	3	1/8	1/4	1.00	3.25	.50	1.125	.171	.50	.700	1.126
-4	4	1/8	1/4	1.00	4.37	.50	1.125	.171	.50	.700	2.250
-5	5	1/8	1/4	1.00	5.50	.50	1.125	.171	.50	.700	3.375
-6	6	1/8	1/4	1.00	6.62	.50	1.125	.171	.50	.700	4.500
-7	7	1/8	1/4	1.00	7.75	.50	1.125	.171	.50	.700	5.625
-8	8	1/8	1/4	1.00	8.87	.50	1.125	.171	.50	.700	6.750

3/8 / 1/8

SINGLE ROW - PART NO. SIL 125 -
Increased Center Distance 1.125 Inch - Large Feeding Port 3/8 NPT

Dash No.	A Ports	A NPT	B NPT	C	D	E	F	G DIA.	H	J	K
-2	2	1/8	3/8	1.25	2.37	.62	1.125	.203	.62	.890	.000
-3	3	1/8	3/8	1.25	3.50	.62	1.125	.203	.62	.890	1.125
-4	4	1/8	3/8	1.25	4.62	.62	1.125	.203	.62	.890	2.250
-5	5	1/8	3/8	1.25	5.75	.62	1.125	.203	.62	.890	3.375
-6	6	1/8	3/8	1.25	6.87	.62	1.125	.203	.62	.890	4.500
-7	7	1/8	3/8	1.25	8.00	.62	1.125	.203	.62	.890	5.625
-8	8	1/8	3/8	1.25	9.12	.62	1.125	.203	.62	.890	6.750

3/8 / 1/4

SINGLE ROW - PART NO. S 250 -

Dash No.	A Ports	A NPT	B NPT	C	D	E	F	G DIA.	H	J	K
-2	2	1/4	3/8	1.25	2.12	.62	.875	.203	.62	.890	.000
-3	3	1/4	3/8	1.25	3.00	.62	.875	.203	.62	.890	.875
-4	4	1/4	3/8	1.25	3.87	.62	.875	.203	.62	.890	1.750
-5	5	1/4	3/8	1.25	4.75	.62	.875	.203	.62	.890	2.625
-6	6	1/4	3/8	1.25	5.62	.62	.875	.203	.62	.890	3.500
-7	7	1/4	3/8	1.25	6.50	.62	.875	.203	.62	.890	4.375
-8	8	1/4	3/8	1.25	7.37	.62	.875	.203	.62	.890	5.250
-9	9	1/4	3/8	1.25	8.25	.62	.875	.203	.62	.890	6.125
-10	10	1/4	3/8	1.25	9.12	.62	.875	.203	.62	.890	7.000

3/8 / 1/4

SINGLE ROW - PART NO. SI 250 -
Increased Center Distance 1.375 Inch

Dash No.	A Ports	A NPT	B NPT	C	D	E	F	G DIA.	H	J	K
-2	2	1/4	3/8	1.25	2.62	.62	1.375	.203	.62	.890	.000
-3	3	1/4	3/8	1.25	4.00	.62	1.375	.203	.62	.890	1.375
-4	4	1/4	3/8	1.25	5.37	.62	1.375	.203	.62	.890	2.750
-5	5	1/4	3/8	1.25	6.75	.62	1.375	.203	.62	.890	4.125
-6	6	1/4	3/8	1.25	8.12	.62	1.375	.203	.62	.890	5.500
-7	7	1/4	3/8	1.25	9.50	.62	1.375	.203	.62	.890	6.875
-8	8	1/4	3/8	1.25	10.87	.62	1.375	.203	.62	.890	8.250

1/2 / 1/4

SINGLE ROW - PART NO. SIL 250 -
Increased Center Distance 1.375 Inch - Large Feeding Port 1/2 NPT

Dash No.	A Ports	A NF	B NPT	C	D	E	F	G DIA.	H	J	K
-2	2	1/4	1/2	1.50	2.87	.75	1.375	.280	.75	1.062	.000
-3	3	1/4	1/2	1.50	4.25	.75	1.375	.280	.75	1.062	1.375
-4	4	1/4	1/2	1.50	5.62	.75	1.375	.280	.75	1.062	2.750
-5	5	1/4	1/2	1.50	7.00	.75	1.375	.280	.75	1.062	4.125
-6	6	1/4	1/2	1.50	8.37	.75	1.375	.280	.75	1.062	5.500

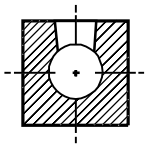

SECTION *X - X*

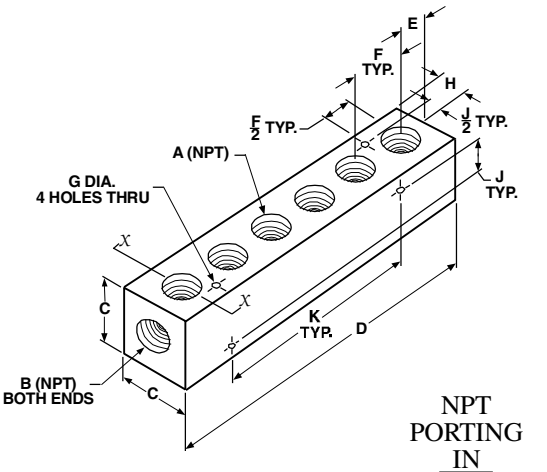

NPT PORTING IN / OUT

3/8 / 3/8

SINGLE ROW - PART NO. SA 375 -

Dash No.	A Ports	A NPT	B NPT	C	D	E	F	G DIA.	H	J	K
-2	2	3/8	3/8	1.50	2.62	.75	1.125	.280	.75	1.062	.000
-3	3	3/8	3/8	1.50	3.75	.75	1.125	.280	.75	1.062	1.125
-4	4	3/8	3/8	1.50	4.87	.75	1.125	.280	.75	1.062	2.250
-5	5	3/8	3/8	1.50	6.00	.75	1.125	.280	.75	1.062	3.375
-6	6	3/8	3/8	1.50	7.12	.75	1.125	.280	.75	1.062	4.500
-7	7	3/8	3/8	1.50	8.25	.75	1.125	.280	.75	1.062	5.625
-8	8	3/8	3/8	1.50	9.37	.75	1.125	.280	.75	1.062	6.750

1/2 / 3/8

SINGLE ROW - PART NO. S 375 -

Dash No.	A Ports	A NPT	B NPT	C	D	E	F	G DIA.	H	J	K
-2	2	3/8	1/2	1.50	2.75	.81	1.125	.280	.75	1.062	.000
-3	3	3/8	1/2	1.50	3.87	.81	1.125	.280	.75	1.062	1.125
-4	4	3/8	1/2	1.50	5.00	.81	1.125	.280	.75	1.062	2.250
-5	5	3/8	1/2	1.50	6.12	.81	1.125	.280	.75	1.062	3.375
-6	6	3/8	1/2	1.50	7.25	.81	1.125	.280	.75	1.062	4.500
-7	7	3/8	1/2	1.50	8.37	.81	1.125	.280	.75	1.062	5.625
-8	8	3/8	1/2	1.50	9.50	.81	1.125	.280	.75	1.062	6.750
-9	9	3/8	1/2	1.50	10.62	.81	1.125	.280	.75	1.062	7.875
-10	10	3/8	1/2	1.50	11.75	.81	1.125	.280	.75	1.062	9.000

1/2 / 3/8

SINGLE ROW - PART NO. SI 375 -
Increased Center Distance 2.000 Inch

Dash No.	A Ports	A NPT	B NPT	C	D	E	F	G DIA.	H	J	K
-2	2	3/8	1/2	1.50	3.62	.81	2.000	.280	.75	1.062	.000
-3	3	3/8	1/2	1.50	5.62	.81	2.000	.280	.75	1.062	2.000
-4	4	3/8	1/2	1.50	7.62	.81	2.000	.280	.75	1.062	4.000
-5	5	3/8	1/2	1.50	9.62	.81	2.000	.280	.75	1.062	6.000
-6	6	3/8	1/2	1.50	11.62	.81	2.000	.280	.75	1.062	8.000
-7	7	3/8	1/2	1.50	13.62	.81	2.000	.280	.75	1.062	10.000
-8	8	3/8	1/2	1.50	15.62	.81	2.000	.280	.75	1.062	12.000

3/4 / 3/8

SINGLE ROW - PART NO. SL 375 -
Large Feeding Port 3/4 NPT

Dash No.	A Ports	A NPT	B NPT	C	D	E	F	G DIA.	H	J	K
-2	2	3/8	3/4	1.75	3.62	1.25	1.125	.280	.87	1.312	.000
-3	3	3/8	3/4	1.75	4.75	1.25	1.125	.280	.87	1.312	1.125
-4	4	3/8	3/4	1.75	5.87	1.25	1.125	.280	.87	1.312	2.250
-5	5	3/8	3/4	1.75	7.00	1.25	1.125	.280	.87	1.312	3.375
-6	6	3/8	3/4	1.75	8.12	1.25	1.125	.280	.87	1.312	4.500
-7	7	3/8	3/4	1.75	9.25	1.25	1.125	.280	.87	1.312	5.625
-8	8	3/8	3/4	1.75	10.37	1.25	1.125	.280	.87	1.312	6.750
-9	9	3/8	3/4	1.75	11.50	1.25	1.125	.280	.87	1.312	7.875
-10	10	3/8	3/4	1.75	12.62	1.25	1.125	.280	.87	1.312	9.000

3/4 / 3/8

SINGLE ROW - PART NO. SIL 375 -
Increased Center Distance 2.000 Inch - Large Feeding Port 3/4 NPT

Dash No.	A Ports	A NPT	B NPT	C	D	E	F	G DIA.	H	J	K
-2	2	3/8	3/4	1.75	4.50	1.25	2.000	.280	.87	1.312	.000
-3	3	3/8	3/4	1.75	6.50	1.25	2.000	.280	.87	1.312	2.000
-4	4	3/8	3/4	1.75	8.50	1.25	2.000	.280	.87	1.312	4.000
-5	5	3/8	3/4	1.75	10.50	1.25	2.000	.280	.87	1.312	6.000
-6	6	3/8	3/4	1.75	12.50	1.25	2.000	.280	.87	1.312	8.000

B & R INDUSTRIES INC.
12 Commercial Blvd., Medford, N.Y. 11763
TEL. (631) 736-2275 • FAX (631) 736-2725
WEB - www.manifoldcenter.com • E-mail - sales@manifoldcenter.com

SINGLE ROW MANIFOLDS - NPT PORTING -

NPT PORTING IN/OUT

1/2 / 1/2

SINGLE ROW - PART NO. SA 500 -

Dash No.	A Ports	A NPT	B NPT	C	D	E	F	G DIA.	H	J	K
-2	2	1/2	1/2	1.75	3.87	1.25	1.370	.280	.87	1.312	.000
-3	3	1/2	1/2	1.75	5.25	1.25	1.370	.280	.87	1.312	1.375
-4	4	1/2	1/2	1.75	6.62	1.25	1.370	.280	.87	1.312	2.750
-5	5	1/2	1/2	1.75	8.00	1.25	1.370	.280	.87	1.312	4.125
-6	6	1/2	1/2	1.75	9.37	1.25	1.370	.280	.87	1.312	5.500
-7	7	1/2	1/2	1.75	10.75	1.25	1.370	.280	.87	1.312	6.875
-8	8	1/2	1/2	1.75	12.12	1.25	1.370	.280	.87	1.312	8.250
-9	9	1/2	1/2	1.75	13.50	1.25	1.370	.280	.87	1.312	9.625
-10	10	1/2	1/2	1.75	14.87	1.25	1.370	.280	.87	1.312	11.000

3/4 / 1/2

SINGLE ROW - PART NO. S 500 -

Dash No.	A Ports	A NPT	B NPT	C	D	E	F	G DIA.	H	J	K
-2	2	1/2	3/4	1.75	3.87	1.25	1.370	.280	.87	1.312	.000
-3	3	1/2	3/4	1.75	5.25	1.25	1.370	.280	.87	1.312	1.375
-4	4	1/2	3/4	1.75	6.62	1.25	1.370	.280	.87	1.312	2.750
-5	5	1/2	3/4	1.75	8.00	1.25	1.370	.280	.87	1.312	4.125
-6	6	1/2	3/4	1.75	9.37	1.25	1.370	.280	.87	1.312	5.500
-7	7	1/2	3/4	1.75	10.75	1.25	1.370	.280	.87	1.312	6.875
-8	8	1/2	3/4	1.75	12.12	1.25	1.370	.280	.87	1.312	8.250
-9	9	1/2	3/4	1.75	13.50	1.25	1.370	.280	.87	1.312	9.625
-10	10	1/2	3/4	1.75	14.87	1.25	1.370	.280	.87	1.312	11.000

3/4 / 1/2

SINGLE ROW - PART NO. SI 500 -
Increased Center Distance 2.50 Inch

Dash No.	A Ports	A NF	B NPT	C	D	E	F	G DIA.	H	J	K
-2	2	1/2	3/4	1.75	5.00	1.25	2.500	.280	.87	1.312	.000
-3	3	1/2	3/4	1.75	7.50	1.25	2.500	.280	.87	1.312	2.500
-4	4	1/2	3/4	1.75	10.00	1.25	2.500	.280	.87	1.312	5.000
-5	5	1/2	3/4	1.75	12.50	1.25	2.500	.280	.87	1.312	7.500
-6	6	1/2	3/4	1.75	15.00	1.25	2.500	.280	.87	1.312	10.000

1 / 1/2

SINGLE ROW - PART NO. SL 500 -
-Large Feeding Port 1" NPT

Dash No.	A Ports	A NPT	B NPT	C	D	E	F	G DIA.	H	J	K
-2	2	1/2	1	2.25	3.87	1.25	1.370	.340	1.12	1.750	.000
-3	3	1/2	1	2.25	5.25	1.25	1.370	.340	1.12	1.750	1.375
-4	4	1/2	1	2.25	6.62	1.25	1.370	.340	1.12	1.750	2.750
-5	5	1/2	1	2.25	8.00	1.25	1.370	.340	1.12	1.750	4.125
-6	6	1/2	1	2.25	9.37	1.25	1.370	.340	1.12	1.750	5.500
-7	7	1/2	1	2.25	10.75	1.25	1.370	.340	1.12	1.750	6.875
-8	8	1/2	1	2.25	12.12	1.25	1.370	.340	1.12	1.750	8.250
-9	9	1/2	1	2.25	13.50	1.25	1.370	.340	1.12	1.750	9.625
-10	10	1/2	1	2.25	14.87	1.25	1.370	.340	1.12	1.750	11.000

1 / 1/2

SINGLE ROW - PART NO. SIL 500 -
Increased Center Distance 2.50 Inch-LARGE FEEDING PORT 1" NPT

Dash No.	A Ports	A NF	B NPT	C	D	E	F	G DIA.	H	J	K
-2	2	1/2	1	2.25	5.00	1.25	2.500	.340	1.12	1.750	.000
-3	3	1/2	1	2.25	7.50	1.25	2.500	.340	1.12	1.750	2.500
-4	4	1/2	1	2.25	10.00	1.25	2.500	.340	1.12	1.750	5.000
-5	5	1/2	1	2.25	12.50	1.25	2.500	.340	1.12	1.750	7.500
-6	6	1/2	1	2.25	15.00	1.25	2.500	.340	1.12	1.750	10.000

3/4 / 3/4

SINGLE ROW - PART NO. SA 750 -

Dash No.	A Ports	A NPT	B NPT	C	D	E	F	G DIA.	H	J	K
-2	2	3/4	3/4	2.00	4.25	1.12	2.000	.280	1.00	1.562	.000
-3	3	3/4	3/4	2.00	6.25	1.12	2.000	.280	1.00	1.562	2.000
-4	4	3/4	3/4	2.00	8.25	1.12	2.000	.280	1.00	1.562	4.000
-5	5	3/4	3/4	2.00	10.25	1.12	2.000	.280	1.00	1.562	6.000
-6	6	3/4	3/4	2.00	12.25	1.12	2.000	.280	1.00	1.562	8.000
-7	7	3/4	3/4	2.00	14.25	1.12	2.000	.280	1.00	1.562	10.000

1 / 3/4

SINGLE ROW - PART NO. S 750 -

Dash No.	A Ports	A NPT	B NPT	C	D	E	F	G DIA.	H	J	K
-2	2	3/4	1	2.25	4.50	1.25	2.000	.340	1.12	1.750	.000
-3	3	3/4	1	2.25	6.50	1.25	2.000	.340	1.12	1.750	2.000
-4	4	3/4	1	2.25	8.50	1.25	2.000	.340	1.12	1.750	4.000
-5	5	3/4	1	2.25	10.50	1.25	2.000	.340	1.12	1.750	6.000
-6	6	3/4	1	2.25	12.50	1.25	2.000	.340	1.12	1.750	8.000
-7	7	3/4	1	2.25	14.50	1.25	2.000	.340	1.12	1.750	10.000

NPT PORTING IN/OUT

1 / 3/4

SINGLE ROW - PART NO. SI 750 -
Increased Center Distance 2.750

Dash No.	A Ports	A NPT	B NPT	C	D	E	F	G DIA.	H	J	K
-2	2	3/4	1	2.25	5.25	1.25	2.750	.340	1.12	1.750	.000
-3	3	3/4	1	2.25	8.00	1.25	2.750	.340	1.12	1.750	2.750
-4	4	3/4	1	2.25	10.75	1.25	2.750	.340	1.12	1.750	5.500
-5	5	3/4	1	2.25	13.50	1.25	2.750	.340	1.12	1.750	8.250

1 1/4 / 3/4

SINGLE ROW - PART NO. SL 750 -
Large Feeding Port 1 1/4" NPT

Dash No.	A Ports	A NPT	B NPT	C	D	E	F	G DIA.	H	J	K
-2	2	3/4	1 1/4	3.00	5.00	1.50	2.000	.340	1.50	2.375	.000
-3	3	3/4	1 1/4	3.00	7.00	1.50	2.000	.340	1.50	2.375	2.000
-4	4	3/4	1 1/4	3.00	9.00	1.50	2.000	.340	1.50	2.375	4.000
-5	5	3/4	1 1/4	3.00	11.00	1.50	2.000	.340	1.50	2.375	6.000
-6	6	3/4	1 1/4	3.00	13.00	1.50	2.000	.340	1.50	2.375	8.000
-7	7	3/4	1 1/4	3.00	15.00	1.50	2.000	.340	1.50	2.375	50.000

1 1/4 / 3/4

SINGLE ROW - PART NO. SIL 750 -
Increased Center Distance 2.75 Inch-Large Feeding Port 1 1/4" NPT

Dash No.	A Ports	A NPT	B NPT	C	D	E	F	G DIA.	H	J	K
-2	2	3/4	1 1/4	3.00	5.75	1.50	2.750	.340	1.50	2.375	.000
-3	3	3/4	1 1/4	3.00	8.50	1.50	2.750	.340	1.50	2.375	2.750
-4	4	3/4	1 1/4	3.00	11.25	1.50	2.750	.340	1.50	2.375	5.500
-5	5	3/4	1 1/4	3.00	14.00	1.50	2.750	.340	1.50	2.375	8.250

1 / 1

SINGLE ROW - PART NO. SA 1000 -

Dash No.	A Ports	A NPT	B NPT	C	D	E	F	G DIA.	H	J	K
-2	2	1	1	2.75	5.37	1.50	2.375	.340	1.37	2.125	.000
-3	3	1	1	2.75	7.75	1.50	2.375	.340	1.37	2.125	2.375
-4	4	1	1	2.75	10.12	1.50	2.375	.340	1.37	2.125	4.750
-5	5	1	1	2.75	12.50	1.50	2.375	.340	1.37	2.125	7.125
-6	6	1	1	2.75	14.87	1.50	2.375	.340	1.37	2.125	9.500

1 1/4 / 1

SINGLE ROW - PART NO. S 1000 -

Dash No.	A Ports	A NPT	B NPT	C	D	E	F	G DIA.	H	J	K
-2	2	1	1 1/4	3.00	5.87	1.75	2.375	.340	1.50	2.375	.000
-3	3	1	1 1/4	3.00	8.25	1.75	2.375	.340	1.50	2.375	2.375
-4	4	1	1 1/4	3.00	10.62	1.75	2.375	.340	1.50	2.375	4.750
-5	5	1	1 1/4	3.00	13.00	1.75	2.375	.340	1.50	2.375	7.125
-6	6	1	1 1/4	3.00	15.37	1.75	2.375	.340	1.50	2.375	9.500

1 1/4 / 1

SINGLE ROW - PART NO. SI 1000 -
Increased Center Distance 3.500 Inch

Dash No.	A Ports	A NPT	B NPT	C	D	E	F	G DIA.	H	J	K
-2	2	1	1 1/4	3.00	7.00	1.75	3.500	.340	1.50	2.375	.000
-3	3	1	1 1/4	3.00	10.50	1.75	3.500	.340	1.50	2.375	3.500
-4	4	1	1 1/4	3.00	14.00	1.75	3.500	.340	1.50	2.375	7.000

1 1/4 / 1 1/4

SINGLE ROW - PART NO. SA 1250 -

Dash No.	A Ports	A NPT	B NPT	C	D	E	F	G DIA.	H	J	K
-2	2	1 1/4	1 1/4	3.00	6.87	1.75	3.370	.340	1.50	2.375	.000
-3	3	1 1/4	1 1/4	3.00	10.25	1.75	3.370	.340	1.50	2.375	3.375
-4	4	1 1/4	1 1/4	3.00	13.62	1.75	3.370	.340	1.50	2.375	6.750

1 1/2 / 1 1/4

SINGLE ROW - PART NO. S 1250 -

Dash No.	A Ports	A NPT	B NPT	C	D	E	F	G DIA.	H	J	K
-2	2	1 1/4	1 1/2	3.50	7.37	2.00	3.370	.530	1.75	2.687	.000
-3	3	1 1/4	1 1/2	3.50	10.75	2.00	3.370	.530	1.75	2.687	3.375
-4	4	1 1/4	1 1/2	3.50	14.12	2.00	3.370	.530	1.75	2.687	6.750

1 1/2 / 1 1/2

SINGLE ROW - PART NO. SA 1500 -

Dash No.	A Ports	A NPT	B NPT	C	D	E	F	G DIA.	H	J	K
-2	2	1 1/2	1 1/2	4.00	8.00	2.25	3.50	.530	1.75	2.687	.000
-3	3	1 1/2	1 1/2	4.00	11.50	2.25	3.50	.530	1.75	2.687	3.250
-4	4	1 1/2	1 1/2	4.00	15.25	2.25	3.50	.530	1.75	2.687	7.000

2 / 1 1/2

SINGLE ROW - PART NO. S 1500 -

Dash No.	A Ports	A NPT	B NPT	C	D	E	F	G DIA.	H	J	K
-2	2	1 1/2	2	4.00	8.00	2.25	3.500	.530	2.00	3.187	.000
-3	3	1 1/2	2	4.00	11.50	2.25	3.500	.530	2.00	3.187	3.500
-4	4	1 1/2	2	4.00	15.00	2.25	3.500	.530	2.00	3.187	7.000

B & R INDUSTRIES INC.
12 Commercial Blvd., Medford, N.Y. 11763
TEL. (631) 736-2275 • FAX (631) 736-2725
WEB - www.manifoldcenter.com • E-mail - sales@manifoldcenter.com

DOUBLE ROW MANIFOLDS - NPT PORTING

Requirements not listed are quoted upon request.

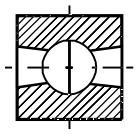

SECTION *X - X*

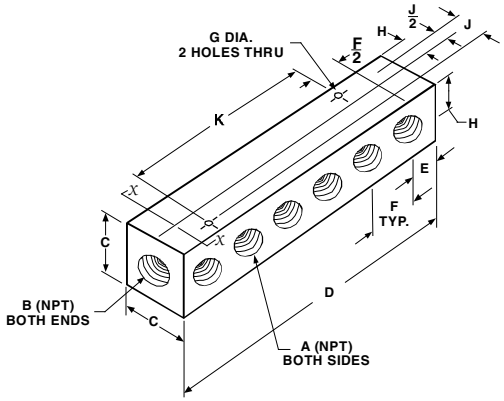

NPT PORTING IN / OUT

1/8 / 10-32 NF

DOUBLE ROW - PART NO. D 32 -
(10-32 NF - 2B PORTS)

Dash No.	A Ports	A NF	B NPT	C	D	E	F	G DIA.	H	J	K
-8	8	10-32	1/8	3/4	2.50	.50	.500	.144	.37	.518	1.000
-12	12	10-32	1/8	3/4	3.50	.50	.500	.144	.37	.518	2.000
-16	16	10-32	1/8	3/4	4.50	.50	.500	.144	.37	.518	3.000
-20	20	10-32	1/8	3/4	5.50	.50	.500	.144	.37	.518	4.000

1/4 / 1/8

DOUBLE ROW - PART NO. D 125 -

Dash No.	A Ports	A NPT	B NPT	C	D	E	F	G DIA.	H	J	K
-4	4	1/8	1/4	1.00	1.75	.50	.750	.171	.50	.700	.000
-6	6	1/8	1/4	1.00	2.50	.50	.750	.171	.50	.700	.750
-8	8	1/8	1/4	1.00	3.25	.50	.750	.171	.50	.700	1.500
-10	10	1/8	1/4	1.00	4.00	.50	.750	.171	.50	.700	2.250
-12	12	1/8	1/4	1.00	4.75	.50	.750	.171	.50	.700	3.000
-14	14	1/8	1/4	1.00	5.50	.50	.750	.171	.50	.700	3.750
-16	16	1/8	1/4	1.00	6.25	.50	.750	.171	.50	.700	4.500
-20	20	1/8	1/4	1.00	7.75	.50	.750	.171	.50	.700	6.000

1/4 / 1/8

DOUBLE ROW - PART NO. DI 125 -
Increased Center Distance 1.125 Inch

Dash No.	A Ports	A NPT	B NPT	C	D	E	F	G DIA.	H	J	K
-4	4	1/8	1/4	1.00	2.12	.50	1.125	.171	.50	.700	.000
-6	6	1/8	1/4	1.00	3.25	.50	1.125	.171	.50	.700	1.125
-8	8	1/8	1/4	1.00	4.37	.50	1.12	.171	.50	.700	2.250
-10	10	1/8	1/4	1.00	5.50	.50	1.125	.171	.50	.700	3.375
-12	12	1/8	1/4	1.00	6.62	.50	1.125	.171	.50	.700	4.500
-14	14	1/8	1/4	1.00	7.75	.50	1.125	.171	.50	.700	5.625
-16	16	1/8	1/4	1.00	8.87	.50	1.125	.171	.50	.700	6.750

3/8 / 1/8

DOUBLE ROW - PART NO. DIL 125 -
Increased Center Distance 1.125 Inch - Large Feeding Port 3/8 NPT

Dash No.	A Ports	A NPT	B NPT	C	D	E	F	G DIA.	H	J	K
-4	4	1/8	3/8	1.25	2.37	.62	1.125	.203	.62	.890	.000
-6	6	1/8	3/8	1.25	3.50	.62	1.125	.203	.62	.890	1.125
-8	8	1/8	3/8	1.25	4.62	.62	1.125	.203	.62	.890	2.250
-10	10	1/8	3/8	1.25	5.75	.62	1.125	.203	.62	.890	3.375
-12	12	1/8	3/8	1.25	6.87	.62	1.125	.203	.62	.890	4.500
-14	14	1/8	3/8	1.25	8.00	.62	1.125	.203	.62	.890	5.625
-16	16	1/8	3/8	1.25	9.12	.62	1.125	.203	.62	.890	6.750

3/8 / 1/4

DOUBLE ROW - PART NO. D 250 -

Dash No.	A Ports	A NPT	B NPT	C	D	E	F	G DIA.	H	J	K
-4	4	1/4	3/8	1.25	2.12	.62	.875	.203	.62	.890	.000
-6	6	1/4	3/8	1.25	3.00	.62	.875	.203	.62	.890	.875
-8	8	1/4	3/8	1.25	3.87	.62	.875	.203	.62	.890	1.750
-10	10	1/4	3/8	1.25	4.75	.62	.875	.203	.62	.890	2.625
-12	12	1/4	3/8	1.25	5.62	.62	.875	.203	.62	.890	3.500
-14	14	1/4	3/8	1.25	6.50	.62	.875	.203	.62	.890	4.375
-16	16	1/4	3/8	1.25	7.37	.62	.875	.203	.62	.890	5.250
-18	18	1/4	3/8	1.25	8.25	.62	.875	.203	.62	.890	6.125
-20	20	1/4	3/8	1.25	9.12	.62	.875	.203	.62	.890	7.000

3/8 / 1/4

DOUBLE ROW - PART NO. DI 250 -
Increased Center Distance 1.375 Inch

Dash No.	A Ports	A NPT	B NPT	C	D	E	F	G DIA.	H	J	K
-4	4	1/4	3/8	1.25	2.62	.62	1.375	.203	.62	.890	.000
-6	6	1/4	3/8	1.25	4.00	.62	1.375	.203	.62	.890	1.375
-8	8	1/4	3/8	1.25	5.37	.62	1.375	.203	.62	.890	2.750
-10	10	1/4	3/8	1.25	6.75	.62	1.375	.203	.62	.890	4.125
-12	12	1/4	3/8	1.25	8.12	.62	1.375	.203	.62	.890	5.500

NPT PORTING IN / OUT

1/2 / 1/4

DOUBLE ROW - PART NO. DIL 250 -
Increased Center Distance 1.375 Inch-Large Feeding Port 1/2 NPT

Dash No.	A Ports	A NPT	B NPT	C	D	E	F	G DIA.	H	J	K
-4	4	1/4	1/2	1.50	2.87	.75	1.375	.280	.75	1.062	.000
-6	6	1/4	1/2	1.50	4.25	.75	1.375	.280	.75	1.062	1.375
-8	8	1/4	1/2	1.50	5.62	.75	1.375	.280	.75	1.062	2.750
-10	10	1/4	1/2	1.50	7.00	.75	1.375	.280	.75	1.062	4.125
-12	12	1/4	1/2	1.50	8.37	.75	1.375	.280	.75	1.062	5.500

3/8 / 3/8

DOUBLE ROW - PART NO. DA 375 -

Dash No.	A Ports	A NPT	B NPT	C	D	E	F	G DIA.	H	J	K
-4	4	3/8	3/8	1.50	2.62	.75	1.125	.280	.75	1.062	.000
-6	6	3/8	3/8	1.50	3.75	.75	1.125	.280	.75	1.062	1.125
-8	8	3/8	3/8	1.50	4.87	.75	1.125	.280	.75	1.062	2.250
-10	10	3/8	3/8	1.50	6.00	.75	1.125	.280	.75	1.062	3.375
-12	12	3/8	3/8	1.50	7.12	.75	1.125	.280	.75	1.062	4.500
-14	14	3/8	3/8	1.50	8.25	.75	1.125	.280	.75	1.062	5.625

1/2 / 3/8

DOUBLE ROW - PART NO. D 375 -

Dash No.	A Ports	A NPT	B NPT	C	D	E	F	G DIA.	H	J	K
-4	4	3/8	1/2	1.50	2.75	.81	1.125	.280	.75	1.062	.000
-6	6	3/8	1/2	1.50	3.87	.81	1.125	.280	.75	1.062	1.125
-8	8	3/8	1/2	1.50	5.00	.81	1.125	.280	.75	1.062	2.250
-10	10	3/8	1/2	1.50	6.12	.81	1.125	.280	.75	1.062	3.375
-12	12	3/8	1/2	1.50	7.25	.81	1.125	.280	.75	1.062	4.500
-14	14	3/8	1/2	1.50	8.37	.81	1.125	.280	.75	1.062	5.625
-16	16	3/8	1/2	1.50	9.50	.81	1.125	.280	.75	1.062	6.750
-18	18	3/8	1/2	1.50	10.62	.81	1.125	.280	.75	1.062	7.875
-20	20	3/8	1/2	1.50	11.75	.81	1.125	.280	.75	1.062	9.000

1/2 / 3/8

DOUBLE ROW - PART NO. DI 375 -
Increased Center Distance 2.000 Inch

Dash No.	A Ports	A NPT	B NPT	C	D	E	F	G DIA.	H	J	K
-4	4	3/8	1/2	1.50	3.62	.81	2.000	.280	.75	1.062	.000
-6	6	3/8	1/2	1.50	5.62	.81	2.000	.280	.75	1.062	2.000
-8	8	3/8	1/2	1.50	7.62	.81	2.000	.280	.75	1.062	4.000
-10	10	3/8	1/2	1.50	9.62	.81	2.000	.280	.75	1.062	6.000
-12	12	3/8	1/2	1.50	11.62	.81	2.000	.280	.75	1.062	8.000

3/4 / 3/8

DOUBLE ROW - PART NO. DL 375 -
Large Feeding Port 3/4 NPT

Dash No.	A Ports	A NPT	B NPT	C	D	E	F	G DIA.	H	J	K
-4	4	3/8	3/4	1.75	3.62	1.25	1.125	.280	.87	1.312	.000
-6	6	3/8	3/4	1.75	4.75	1.25	1.125	.280	.87	1.312	1.125
-8	8	3/8	3/4	1.75	5.87	1.25	1.125	.280	.87	1.312	2.250
-10	10	3/8	3/4	1.75	7.00	1.25	1.125	.280	.87	1.312	3.375
-12	12	3/8	3/4	1.75	8.12	1.25	1.125	.280	.87	1.312	4.500
-14	14	3/8	3/4	1.75	9.25	1.25	1.125	.280	.87	1.312	5.625
-16	16	3/8	3/4	1.75	10.37	1.25	1.125	.280	.87	1.312	6.750
-18	18	3/8	3/4	1.75	11.50	1.25	1.125	.280	.87	1.312	7.875
-20	20	3/8	3/4	1.75	12.62	1.25	1.125	.280	.87	1.312	9.000

3/4 / 3/8

DOUBLE ROW - PART NO. DIL 375 -
Increased Center Distance 2.000 Inch - Large Feeding Port 3/4 NPT

Dash No.	A Ports	A NPT	B NPT	C	D	E	F	G DIA.	H	J	K
-4	4	3/8	3/4	1.75	4.50	1.25	2.000	.280	.87	1.312	.000
-6	6	3/8	3/4	1.75	6.50	1.25	2.000	.280	.87	1.312	2.000
-8	8	3/8	3/4	1.75	8.50	1.25	2.000	.280	.87	1.312	4.000
-10	10	3/8	3/4	1.75	10.50	1.25	2.000	.280	.87	1.312	6.000
-12	12	3/8	3/4	1.75	12.50	1.25	2.000	.280	.87	1.312	8.000

B & R INDUSTRIES INC.
12 Commercial Blvd., Medford, N.Y. 11763
TEL. (631) 736-2275 • FAX (631) 736-2725
WEB - www.manifoldcenter.com • E-mail - sales@manifoldcenter.com

NPT PORTING IN/OUT

Requirements not listed are quoted upon request.

NPT PORTING IN/OUT

DOUBLE ROW - PART NO. DA 500 -

1/2 / 1/2

Dash No.	A Ports	A NPT	B NPT	C	D	E	F	G DIA.	H	J	K
-4	4	1/2	1/2	1.75	3.87	1.25	1.375	.280	.87	1.312	.000
-6	6	1/2	1/2	1.75	5.25	1.25	1.375	.280	.87	1.312	1.375
-8	8	1/2	1/2	1.75	6.62	1.25	1.375	.280	.87	1.312	2.750
-10	10	1/2	1/2	1.75	8.00	1.25	1.375	.280	.87	1.312	4.125
-12	12	1/2	1/2	1.75	9.37	1.25	1.375	.280	.87	1.312	5.500
-14	14	1/2	1/2	1.75	10.75	1.25	1.375	.280	.87	1.312	6.875
-16	16	1/2	1/2	1.75	12.12	1.25	1.375	.280	.87	1.312	8.250
-18	18	1/2	1/2	1.75	13.50	1.25	1.375	.280	.87	1.312	9.625
-20	20	1/2	1/2	1.75	14.87	1.25	1.375	.280	.87	1.312	11.000

DOUBLE ROW - PART NO. D 500 -

3/4 / 1/2

Dash No.	A Ports	A NPT	B NPT	C	D	E	F	G DIA.	H	J	K
-4	4	1/2	3/4	1.75	3.87	1.25	1.375	.280	.87	1.312	.000
-6	6	1/2	3/4	1.75	5.25	1.25	1.375	.280	.87	1.312	1.375
-8	8	1/2	3/4	1.75	6.62	1.25	1.375	.280	.87	1.312	2.750
-10	10	1/2	3/4	1.75	8.00	1.25	1.375	.280	.87	1.312	4.125
-12	12	1/2	3/4	1.75	9.37	1.25	1.375	.280	.87	1.312	5.500
-14	14	1/2	3/4	1.75	10.75	1.25	1.375	.280	.87	1.312	6.875
-16	16	1/2	3/4	1.75	12.12	1.25	1.375	.280	.87	1.312	8.250
-18	18	1/2	3/4	1.75	13.50	1.25	1.375	.280	.87	1.312	9.625
-20	20	1/2	3/4	1.75	14.87	1.25	1.375	.280	.87	1.312	11.000

DOUBLE ROW - PART NO. DI 500 -
Increased Center Distance 2.50 Inch

3/4 / 1/2

Dash No.	A Ports	A NPT	B NPT	C	D	E	F	G DIA.	H	J	K
-4	4	1/2	3/4	1.75	5.00	1.25	2.500	.280	.87	1.312	.000
-6	6	1/2	3/4	1.75	7.50	1.25	2.500	.280	.87	1.312	2.500
-8	8	1/2	3/4	1.75	10.00	1.25	2.500	.280	.87	1.312	5.000
-10	10	1/2	3/4	1.75	12.50	1.25	2.500	.280	.87	1.312	7.500
-12	12	1/2	3/4	1.75	15.00	1.25	2.500	.280	.87	1.312	10.000
-14	14	1/2	3/4	1.75	17.50	1.25	2.500	.280	.87	1.312	12.500
-16	16	1/2	3/4	1.75	20.00	1.25	2.500	.280	.87	1.312	15.000

DOUBLE ROW - PART NO. DIL 500 -
Increased Center Distance 2.50 Inch - Large Feeding Port 1" NPT

1 / 1/2

Dash No.	A Ports	A NPT	B NPT	C	D	E	F	G DIA.	H	J	K
-4	4	1/2	1	2.25	5.00	1.25	2.500	.340	1.12	1.750	.000
-6	6	1/2	1	2.25	7.50	1.25	2.500	.340	1.12	1.750	2.500
-8	8	1/2	1	2.25	10.00	1.25	2.500	.340	1.12	1.750	5.000
-10	10	1/2	1	2.25	12.50	1.25	2.500	.340	1.12	1.750	7.500
-12	12	1/2	1	2.25	15.00	1.25	2.500	.340	1.12	1.750	10.000

DOUBLE ROW - PART NO. D 750 -

1 / 3/4

Dash No.	A Ports	A NPT	B NPT	C	D	E	F	G DIA.	H	J	K
-4	4	3/4	1	2.25	4.50	1.25	2.000	.340	1.12	1.750	.000
-6	6	3/4	1	2.25	6.50	1.25	2.000	.340	1.12	1.750	2.000
-8	8	3/4	1	2.25	8.50	1.25	2.000	.340	1.12	1.750	4.000
-10	10	3/4	1	2.25	10.50	1.25	2.000	.340	1.12	1.750	6.000
-12	12	3/4	1	2.25	12.50	1.25	2.000	.340	1.12	1.750	8.000
-14	14	3/4	1	2.25	14.50	1.25	2.000	.340	1.12	1.750	10.000

DOUBLE ROW - PART NO. DI 750 -
Increased Center Distance 2.75 Inch

1 / 3/4

Dash No.	A Ports	A NPT	B NPT	C	D	E	F	G DIA.	H	J	K
-4	4	3/4	1	2.25	5.25	1.25	2.750	.340	1.12	1.750	.000
-6	6	3/4	1	2.25	8.00	1.25	2.750	.340	1.12	1.750	2.750
-8	8	3/4	1	2.25	10.75	1.25	2.750	.340	1.12	1.750	5.500
-10	10	3/4	1	2.25	13.50	1.25	2.750	.340	1.12	1.750	8.250

DOUBLE ROW - PART NO. DIL 750 -
Increased Center Distance 2.75 Inch - Large Feeding Port 1¼ NPT

1¼ / 3/4

Dash No.	A Ports	A NPT	B NPT	C	D	E	F	G DIA.	H	J	K
-4	4	3/4	1¼	3.00	5.75	1.50	2.750	.340	1.50	2.375	.000
-6	6	3/4	1¼	3.00	8.50	1.50	2.750	.340	1.50	2.375	2.750
-8	8	3/4	1¼	3.00	11.25	1.50	2.750	.340	1.50	2.375	5.500
-10	10	3/4	1¼	3.00	14.00	1.50	2.750	.340	1.50	2.375	8.250

DOUBLE ROW - PART NO. D 1000 -

1¼ / 1

Dash No.	A Ports	A NPT	B NPT	C	D	E	F	G DIA.	H	J	K
-4	4	1	1¼	3.00	5.87	1.75	2.375	.340	1.50	2.375	.000
-6	6	1	1¼	3.00	8.25	1.75	2.375	.340	1.50	2.375	2.375
-8	8	1	1¼	3.00	10.62	1.75	2.375	.340	1.50	2.375	4.750
-10	10	1	1¼	3.00	13.00	1.75	2.375	.340	1.50	2.375	7.125
-12	12	1	1¼	3.00	15.37	1.75	2.375	.340	1.50	2.375	9.500

DOUBLE ROW - PART NO. DL 1000 -
- Large Feeding Port 1½" NPT

1½ / 1

Dash No.	A Ports	A NPT	B NPT	C	D	E	F	G DIA.	H	J	K
-4	4	1	1½	3.50	5.87	1.75	2.375	.530	1.75	2.687	.000
-6	6	1	1½	3.50	8.25	1.75	2.375	.530	1.75	2.687	2.375
-8	8	1	1½	3.50	10.62	1.75	2.375	.530	1.75	2.687	4.750
-10	10	1	1½	3.50	13.00	1.75	2.375	.530	1.75	2.687	7.250
-12	12	1	1½	3.50	15.37	1.75	2.375	.530	1.75	2.687	9.500

DOUBLE ROW - PART NO. DIL 1000 -
Increased Center Distance 3.00 Inch - Large Feeding Port 1½" NPT

1½ / 1

Dash No.	A Ports	A NPT	B NPT	C	D	E	F	G DIA.	H	J	K
-4	4	1	1½	3.50	6.50	1.75	3.000	.530	1.75	2.687	.000
-6	6	1	1½	3.50	9.50	1.75	3.000	.530	1.75	2.687	3.000
-8	8	1	1½	3.50	12.50	1.75	3.000	.530	1.75	2.687	6.000
-10	10	1	1½	3.50	15.50	1.75	3.000	.530	1.75	2.687	9.000

DOUBLE ROW - PART NO. DA 1250 -

1¼ / 1¼

Dash No.	A Ports	A NPT	B NPT	C	D	E	F	G DIA.	H	J	K
-4	4	1¼	1¼	3.00	6.00	1.75	2.500	.340	1.50	2.375	.000
-6	6	1¼	1¼	3.00	8.50	1.75	2.500	.340	1.50	2.375	2.500
-8	8	1¼	1¼	3.00	11.00	1.75	2.500	.340	1.50	2.375	5.000
-10	10	1¼	1¼	3.00	13.50	1.75	2.500	.340	1.50	2.375	7.500

DOUBLE ROW - PART NO. D 1250 -

1½ / 1¼

Dash No.	A Ports	A NPT	B NPT	C	D	E	F	G DIA.	H	J	K
-4	4	1¼	1½	3.50	6.50	2.00	2.500	.530	1.75	2.687	.000
-6	6	1¼	1½	3.50	9.00	2.00	2.500	.530	1.75	2.687	2.500
-8	8	1¼	1½	3.50	11.50	2.00	2.500	.530	1.75	2.687	5.000
-10	10	1¼	1½	3.50	14.00	2.00	2.500	.530	1.75	2.687	7.000

DOUBLE ROW - PART NO. DI 1250 -
Increased Center Distance 3.37 Inch

1½ / 1¼

Dash No.	A Ports	A NPT	B NPT	C	D	E	F	G DIA.	H	J	K
-4	4	1¼	1½	3.50	7.37	2.00	3.370	.530	1.75	2.687	.000
-6	6	1¼	1½	3.50	10.75	2.00	3.370	.530	1.75	2.687	3.375
-8	8	1¼	1½	3.50	14.12	2.00	3.370	.530	1.75	2.687	6.750

DOUBLE ROW - PART NO. DA 1500 -

1½ / 1½

Dash No.	A Ports	A NPT	B NPT	C	D	E	F	G DIA.	H	J	K
-4	4	1½	1½	4.00	8.00	2.25	3.50	.530	2.00	3.187	.000
-6	6	1½	1½	4.00	11.50	2.25	3.50	.530	2.00	3.187	2.875
-8	8	1½	1½	4.00	15.00	2.25	3.50	.530	2.00	3.187	5.750

DOUBLE ROW - PART NO. D 1500 -

2 / 1½

Dash No.	A Ports	A NPT	B NPT	C	D	E	F	G DIA.	H	J	K
-4	4	1½	2	4.00	8.00	2.25	3.50	.530	2.00	3.187	.000
-6	6	1½	2	4.00	11.50	2.25	3.50	.530	2.00	3.187	2.875
-8	8	1½	2	4.00	15.00	2.25	3.50	.530	2.00	3.187	5.750

DOUBLE ROW - PART NO. DI 1500 -
Increased Center Distance 3.750 Inch

2 / 1½

Dash No.	A Ports	A NPT	B NPT	C	D	E	F	G DIA.	H	J	K
-4	4	1½	2	4.00	8.75	2.25	3.750	.530	2.00	3.187	.000
-6	6	1½	2	4.00	12.00	2.25	3.750	.530	2.00	3.187	3.750

B & R INDUSTRIES INC.
12 Commercial Blvd., Medford, N.Y. 11763
TEL. (631) 736-2275 • FAX (631) 736-2725
WEB - www.manifoldcenter.com • E-mail - sales@manifoldcenter.com

RIGHT ANGLE ROW MANIFOLDS - NPT PORTING

Requirements not listed are quoted upon request.

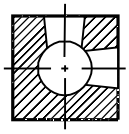

SECTION *X - X*

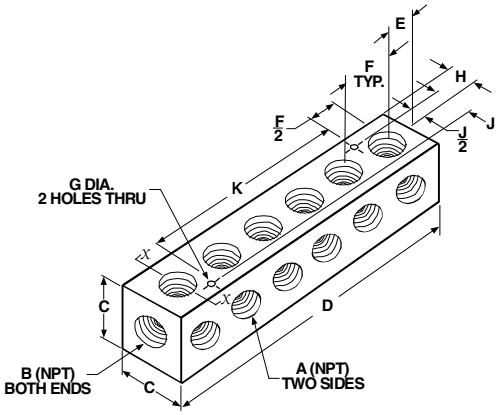

NPT PORTING IN/OUT

1/8 / 10-32 NF

RIGHT ANGLE ROW - PART NO. RA 32 -
(10-32 NF - 2B PORTS)

Dash No.	A Ports	A NF	B NPT	C	D	E	F	G DIA.	H	J	K
-4	4	10-32	1/8	3/4	1.50	.50	.500	.144	.37	.518	.000
-6	6	10-32	1/8	3/4	2.00	.50	.500	.144	.37	.518	.500
-8	8	10-32	1/8	3/4	2.50	.50	.500	.144	.37	.518	1.000
-10	10	10-32	1/8	3/4	3.00	.50	.500	.144	.37	.518	1.500
-12	12	10-32	1/8	3/4	3.50	.50	.500	.144	.37	.518	2.000

1/4 / 1/8

RIGHT ANGLE ROW - PART NO. RA 125 -

Dash No.	A Ports	A NPT	B NPT	C	D	E	F	G DIA.	H	J	K
-4	4	1/8	1/4	1.00	1.75	.50	.750	.171	.50	.700	.000
-6	6	1/8	1/4	1.00	2.50	.50	.750	.171	.50	.700	.750
-8	8	1/8	1/4	1.00	3.25	.50	.750	.171	.50	.700	1.500
-10	10	1/8	1/4	1.00	4.00	.50	.750	.171	.50	.700	2.250
-12	12	1/8	1/4	1.00	4.75	.50	.750	.171	.50	.700	3.000
-14	14	1/8	1/4	1.00	5.50	.50	.750	.171	.50	.700	3.750
-16	16	1/8	1/4	1.00	6.25	.50	.750	.171	.50	.700	4.500
-20	20	1/8	1/4	1.00	7.75	.50	.750	.171	.50	.700	6.000

1/4 / 1/8

RIGHT ANGLE ROW - PART NO. RAI 125 -
Increased Center Distance 1.125 Inch

Dash No.	A Ports	A NPT	B NPT	C	D	E	F	G DIA.	H	J	K
-4	4	1/8	1/4	1.00	2.12	.50	1.125	.171	.50	.700	.000
-6	6	1/8	1/4	1.00	3.25	.50	1.125	.171	.50	.700	1.125
-8	8	1/8	1/4	1.00	4.37	.50	1.125	.171	.50	.700	2.250
-10	10	1/8	1/4	1.00	5.50	.50	1.125	.171	.50	.700	3.375
-12	12	1/8	1/4	1.00	6.62	.50	1.125	.171	.50	.700	4.500
-14	14	1/8	1/4	1.00	7.75	.50	1.125	.171	.50	.700	5.625
-16	16	1/8	1/4	1.00	8.87	.50	1.125	.171	.50	.700	6.750

3/8 / 1/8

RIGHT ANGLE ROW - PART NO. RAL 125 -
Increased Center Distance 1.125 Inch-Large Feeding Port 3/8 NPT

Dash No.	A Ports	A NPT	B NPT	C	D	E	F	G DIA.	H	J	K
-4	4	1/8	3/8	1.25	2.37	.62	1.125	.203	.62	.890	.000
-6	6	1/8	3/8	1.25	3.50	.62	1.125	.203	.62	.890	1.125
-8	8	1/8	3/8	1.25	4.62	.62	1.125	.203	.62	.890	2.250
-10	10	1/8	3/8	1.25	5.75	.62	1.125	.203	.62	.890	3.375
-12	12	1/8	3/8	1.25	6.87	.62	1.125	.203	.62	.890	4.500
-14	14	1/8	3/8	1.25	8.00	.62	1.125	.203	.62	.890	5.625
-16	16	1/8	3/8	1.25	9.12	.62	1.125	.203	.62	.890	6.750

3/8 / 1/4

RIGHT ANGLE ROW - PART NO. RA 250 -

Dash No.	A Ports	A NPT	B NPT	C	D	E	F	G DIA.	H	J	K
-4	4	1/4	3/8	1.25	2.12	.62	.875	.203	.62	.890	.000
-6	6	1/4	3/8	1.25	3.00	.62	.875	.203	.62	.890	.875
-8	8	1/4	3/8	1.25	3.87	.62	.875	.203	.62	.890	1.750
-10	10	1/4	3/8	1.25	4.75	.62	.875	.203	.62	.890	2.625
-12	12	1/4	3/8	1.25	5.62	.62	.875	.203	.62	.890	3.500
-14	14	1/4	3/8	1.25	6.50	.62	.875	.203	.62	.890	4.375
-16	16	1/4	3/8	1.25	7.37	.62	.875	.203	.62	.890	5.250
-18	18	1/4	3/8	1.25	8.25	.62	.875	.203	.62	.890	6.125
-20	20	1/4	3/8	1.25	9.12	.62	.875	.203	.62	.890	7.000

3/8 / 1/4

RIGHT ANGLE ROW - PART NO. RAI 250 -
Increased Center Distance 1.375 Inch

Dash No.	A Ports	A NPT	B NPT	C	D	E	F	G DIA.	H	J	K
-4	4	1/4	3/8	1.25	2.62	.62	1.375	.203	.62	.890	.000
-6	6	1/4	3/8	1.25	4.00	.62	1.375	.203	.62	.890	1.375
-8	8	1/4	3/8	1.25	5.37	.62	1.375	.203	.62	.890	2.750
-10	10	1/4	3/8	1.25	6.75	.62	1.375	.203	.62	.890	4.125
-12	12	1/4	3/8	1.25	8.12	.62	1.375	.203	.62	.890	5.500

NPT PORTING IN/OUT

1/2 / 1/4

RIGHT ANGLE ROW - PART NO. RAIL 250 -
Increased Center Distance 1.375 Inch-Large Feeding Port 3/8 NPT

Dash No.	A Ports	A NPT	B NPT	C	D	E	F	G DIA.	H	J	K
-4	4	1/4	1/2	1.50	2.87	.75	1.375	.280	.75	1.062	.000
-6	6	1/4	1/2	1.50	4.25	.75	1.375	.280	.75	1.062	1.375
-8	8	1/4	1/2	1.50	5.62	.75	1.375	.280	.75	1.062	2.750
-10	10	1/4	1/2	1.50	7.00	.75	1.375	.280	.75	1.062	4.125
-12	12	1/4	1/2	1.50	8.37	.75	1.375	.280	.75	1.062	5.500

3/8 / 3/8

RIGHT ANGLE ROW - PART NO. RAA 375 -

Dash No.	A Ports	A NPT	B NPT	C	D	E	F	G DIA.	H	J	K
-4	4	3/8	3/8	1.50	2.62	.75	1.125	.280	.75	1.062	.000
-6	6	3/8	3/8	1.50	3.75	.75	1.125	.280	.75	1.062	1.125
-8	8	3/8	3/8	1.50	4.87	.75	1.125	.280	.75	1.062	2.250
-10	10	3/8	3/8	1.50	6.00	.75	1.125	.280	.75	1.062	3.375
-12	12	3/8	3/8	1.50	7.12	.75	1.125	.280	.75	1.062	4.500
-14	14	3/8	3/8	1.50	8.25	.75	1.125	.280	.75	1.062	5.625

1/2 / 3/8

RIGHT ANGLE - PART NO. RA 375 -

Dash No.	A Ports	A NPT	B NPT	C	D	E	F	G DIA.	H	J	K
-4	4	3/8	1/2	1.50	2.75	.81	1.125	.280	.75	1.062	.000
-6	6	3/8	1/2	1.50	3.87	.81	1.125	.280	.75	1.062	1.125
-8	8	3/8	1/2	1.50	5.00	.81	1.125	.280	.75	1.062	2.250
-10	10	3/8	1/2	1.50	6.12	.81	1.125	.280	.75	1.062	3.375
-12	12	3/8	1/2	1.50	7.25	.81	1.125	.280	.75	1.062	4.500
-14	14	3/8	1/2	1.50	8.37	.81	1.125	.280	.75	1.062	5.625
-16	16	3/8	1/2	1.50	9.50	.81	1.125	.280	.75	1.062	6.750
-18	18	3/8	1/2	1.50	10.62	.81	1.125	.280	.75	1.062	7.875
-20	20	3/8	1/2	1.50	11.75	.81	1.125	.280	.75	1.062	9.000

1/2 / 3/8

RIGHT ANGLE ROW - PART NO. RAI 375 -
Increased Center Distance 2.000 Inch

Dash No.	A Ports	A NPT	B NPT	C	D	E	F	G DIA.	H	J	K
-4	4	3/8	1/2	1.50	3.62	.81	2.000	.280	.75	1.062	.000
-6	6	3/8	1/2	1.50	5.62	.81	2.000	.280	.75	1.062	2.000
-8	8	3/8	1/2	1.50	7.62	.81	2.000	.280	.75	1.062	4.000
-10	10	3/8	1/2	1.50	9.62	.81	2.000	.280	.75	1.062	6.000
-12	12	3/8	1/2	1.50	11.62	.81	2.000	.280	.75	1.062	8.000

3/4 / 3/8

RIGHT ANGLE ROW - PART NO. RAL 375 -
Large Feeding Port 3/4 NPT

Dash No.	A Ports	A NPT	B NPT	C	D	E	F	G DIA.	H	J	K
-4	4	3/8	3/4	1.75	3.62	1.25	1.125	.280	.75	1.312	.000
-6	6	3/8	3/4	1.75	4.75	1.25	1.125	.280	.75	1.312	1.125
-8	8	3/8	3/4	1.75	5.87	1.25	1.125	.280	.75	1.312	2.250
-10	10	3/8	3/4	1.75	7.00	1.25	1.125	.280	.75	1.312	3.375
-12	12	3/8	3/4	1.75	8.12	1.25	1.125	.280	.75	1.312	4.500
-14	14	3/8	3/4	1.75	9.25	1.25	1.125	.280	.75	1.312	5.625
-16	16	3/8	3/4	1.75	10.37	1.25	1.125	.280	.75	1.312	6.750
-18	18	3/8	3/4	1.75	11.50	1.25	1.125	.280	.75	1.312	7.875
-20	20	3/8	3/4	1.75	12.62	1.25	1.125	.280	.75	1.312	9.000

3/4 / 3/8

RIGHT ANGLE ROW - PART NO. RAIL 375 -
Increased Center Distance 2.000 Inch - Large Feeding Port 3/4 NPT

Dash No.	A Ports	A NPT	B NPT	C	D	E	F	G DIA.	H	J	K
-4	4	3/8	3/4	1.75	4.50	1.25	2.000	.280	.75	1.312	.000
-6	6	3/8	3/4	1.75	6.50	1.25	2.000	.280	.75	1.312	2.000
-8	8	3/8	3/4	1.75	8.50	1.25	2.000	.280	.75	1.312	4.000
-10	10	3/8	3/4	1.75	10.50	1.25	2.000	.280	.75	1.312	6.000
-12	12	3/8	3/4	1.75	12.50	1.25	2.000	.280	.75	1.312	8.000

B & R INDUSTRIES INC.
12 Commercial Blvd., Medford, N.Y. 11763
TEL. (631) 736-2275 • FAX (631) 736-2725
WEB - www.manifoldcenter.com • E-mail - sales@manifoldcenter.com

RIGHT ANGLE ROW MANIFOLDS - NPT PORTING

Requirements not listed are quoted upon request.

NPT PORTING IN/OUT

RIGHT ANGLE ROW - PART NO. RAA 500 -

1/2 / 1/2

Dash No.	A Ports	A NPT	B NPT	C	D	E	F	G DIA.	H	J	K
-4	4	1/2	1/2	1.75	3.87	1.25	1.370	.280	.87	1.312	.000
-6	6	1/2	1/2	1.75	5.25	1.25	1.370	.280	.87	1.312	1.375
-8	8	1/2	1/2	1.75	6.62	1.25	1.370	.280	.87	1.312	2.750
-10	10	1/2	1/2	1.75	8.00	1.25	1.370	.280	.87	1.312	4.125
-12	12	1/2	1/2	1.75	9.37	1.25	1.370	.280	.87	1.312	5.500
-14	14	1/2	1/2	1.75	10.75	1.25	1.370	.280	.87	1.312	6.875
-16	16	1/2	1/2	1.75	12.12	1.25	1.370	.280	.87	1.312	8.250
-18	18	1/2	1/2	1.75	13.50	1.25	1.370	.280	.87	1.312	9.625
-20	20	1/2	1/2	1.75	14.87	1.25	1.370	.280	.87	1.312	11.000

RIGHT ANGLE ROW - PART NO. RA 500 -

3/4 / 1/2

Dash No.	A Ports	A NPT	B NPT	C	D	E	F	G DIA.	H	J	K
-4	4	1/2	3/4	1.75	3.87	1.25	1.370	.280	.87	1.312	.000
-6	6	1/2	3/4	1.75	5.25	1.25	1.370	.280	.87	1.312	1.375
-8	8	1/2	3/4	1.75	6.62	1.25	1.370	.280	.87	1.312	2.750
-10	10	1/2	3/4	1.75	8.00	1.25	1.370	.280	.87	1.312	4.125
-12	12	1/2	3/4	1.75	9.37	1.25	1.370	.280	.87	1.312	5.500
-14	14	1/2	3/4	1.75	10.75	1.25	1.370	.280	.87	1.312	6.875
-16	16	1/2	3/4	1.75	12.12	1.25	1.370	.280	.87	1.312	8.250
-18	18	1/2	3/4	1.75	13.50	1.25	1.370	.280	.87	1.312	9.625
-20	20	1/2	3/4	1.75	14.87	1.25	1.370	.280	.87	1.312	11.000

RIGHT ANGLE ROW - PART NO. RAL 500 -

1 / 1/2

Dash No.	A Ports	A NPT	B NPT	C	D	E	F	G DIA.	H	J	K
-4	4	1/2	1	2.25	3.87	1.25	1.370	.340	1.12	1.750	.000
-6	6	1/2	1	2.25	5.25	1.25	1.370	.340	1.12	1.750	1.375
-8	8	1/2	1	2.25	6.62	1.25	1.370	.340	1.12	1.750	2.750
-10	10	1/2	1	2.25	8.00	1.25	1.370	.340	1.12	1.750	4.125
-12	12	1/2	1	2.25	9.37	1.25	1.370	.340	1.12	1.750	5.500
-14	14	1/2	1	2.25	10.75	1.25	1.370	.340	1.12	1.750	6.875
-16	16	1/2	1	2.25	12.12	1.25	1.370	.340	1.12	1.750	8.250
-18	18	1/2	1	2.25	13.50	1.25	1.370	.340	1.12	1.750	9.625
-20	20	1/2	1	2.25	14.87	1.25	1.370	.340	1.12	1.750	11.000

RIGHT ANGLE ROW - PART NO. RAA 750 -

3/4 / 3/4

Dash No.	A Ports	A NPT	B NPT	C	D	E	F	G DIA.	H	J	K
-4	4	3/4	3/4	2.25	4.50	1.25	2.000	.340	1.25	1.750	.000
-6	6	3/4	3/4	2.25	6.50	1.25	2.000	.340	1.25	1.750	2.000
-8	8	3/4	3/4	2.25	8.50	1.25	2.000	.340	1.25	1.750	4.000
-10	10	3/4	3/4	2.25	10.50	1.25	2.000	.340	1.25	1.750	6.000
-12	12	3/4	3/4	2.25	12.50	1.25	2.000	.340	1.25	1.750	8.000
-14	14	3/4	3/4	2.25	14.50	1.25	2.000	.340	1.25	1.750	10.000

RIGHT ANGLE ROW - PART NO. RA 750 -

1 / 3/4

Dash No.	A Ports	A NPT	B NPT	C	D	E	F	G DIA.	H	J	K
-4	4	3/4	1	2.25	4.50	1.25	2.000	.340	1.12	1.750	.000
-6	6	3/4	1	2.25	6.50	1.25	2.000	.340	1.12	1.750	2.000
-8	8	3/4	1	2.25	8.50	1.25	2.000	.340	1.12	1.750	4.000
-10	10	3/4	1	2.25	10.50	1.25	2.000	.340	1.12	1.750	6.000
-12	12	3/4	1	2.25	12.50	1.25	2.000	.340	1.12	1.750	8.000
-14	14	3/4	1	2.25	14.50	1.25	2.000	.340	1.12	1.750	10.000

RIGHT ANGLE ROW - PART NO. RAI 750 -
- Increased Center Distance 2.750 Inch

1 / 3/4

Dash No.	A Ports	A NPT	B NPT	C	D	E	F	G DIA.	H	J	K
-4	4	3/4	1	2.25	5.25	1.25	2.750	.340	1.12	1.750	.000
-6	6	3/4	1	2.25	8.00	1.25	2.750	.340	1.12	1.750	2.750
-8	8	3/4	1	2.25	10.75	1.25	2.750	.340	1.12	1.750	5.500
-10	10	3/4	1	2.25	13.50	1.25	2.750	.340	1.12	1.750	8.250

NPT PORTING IN/OUT

RIGHT ANGLE ROW - PART NO. RAL 750 -
- Large Feeding Port 1 1/4 NPT

1 1/4 / 3/4

Dash No.	A Ports	A NPT	B NPT	C	D	E	F	G DIA.	H	J	K
-4	4	3/4	1 1/4	3.00	5.00	1.50	2.000	.340	1.50	2.375	.000
-6	6	3/4	1 1/4	3.00	7.00	1.50	2.000	.340	1.50	2.375	2.000
-8	8	3/4	1 1/4	3.00	9.00	1.50	2.000	.340	1.50	2.375	4.000
-10	10	3/4	1 1/4	3.00	11.00	1.50	2.000	.340	1.50	2.375	6.000

RIGHT ANGLE ROW - PART NO. RAA 1000 -

1 / 1

Dash No.	A Ports	A NPT	B NPT	C	D	E	F	G DIA.	H	J	K
-4	4	1	1	2.75	5.87	1.75	2.375	.340	1.37	2.125	.000
-6	6	1	1	2.75	8.25	1.75	2.375	.340	1.37	2.125	2.375
-8	8	1	1	2.75	10.62	1.75	2.375	.340	1.37	2.125	4.750
-10	10	1	1	2.75	13.00	1.75	2.375	.340	1.37	2.125	7.125
-12	12	1	1	2.75	15.37	1.75	2.375	.340	1.37	2.125	9.500

RIGHT ANGLE ROW - PART NO. RA 1000 -

1 1/4 / 1

Dash No.	A Ports	A NPT	B NPT	C	D	E	F	G DIA.	H	J	K
-4	4	1	1 1/4	3.00	5.87	1.75	2.375	.340	1.50	2.375	.000
-6	6	1	1 1/4	3.00	8.25	1.75	2.375	.340	1.50	2.375	2.375
-8	8	1	1 1/4	3.00	10.62	1.75	2.375	.340	1.50	2.375	4.750
-10	10	1	1 1/4	3.00	13.00	1.75	2.375	.340	1.50	2.375	7.125
-12	12	1	1 1/4	3.00	15.37	1.75	2.375	.340	1.50	2.375	9.500

RIGHT ANGLE ROW - PART NO. RAI 1000 -
- Increased Center Distance 3.50 Inch

1 1/4 / 1

Dash No.	A Ports	A NPT	B NPT	C	D	E	F	G DIA.	H	J	K
-4	4	1	1 1/4	3.00	7.00	1.75	3.500	.340	1.50	2.375	.000
-6	6	1	1 1/4	3.00	10.50	1.75	3.500	.340	1.50	2.375	3.500
-8	8	1	1 1/4	3.00	14.00	1.75	3.500	.340	1.50	2.375	7.000

RIGHT ANGLE ROW - PART NO. RAL 1000 -
- Large Feeding Port 1 1/2 NPT

1 1/2 / 1

Dash No.	A Ports	A NPT	B NPT	C	D	E	F	G DIA.	H	J	K
-4	4	1	1 1/2	3.50	5.87	1.75	2.375	.530	1.75	2.687	.000
-6	6	1	1 1/2	3.50	8.25	1.75	2.375	.530	1.75	2.687	2.375
-8	8	1	1 1/2	3.50	10.62	1.75	2.375	.530	1.75	2.687	4.750
-10	10	1	1 1/2	3.50	13.00	1.75	2.375	.530	1.75	2.687	7.125
-12	12	1	1 1/2	3.50	15.37	1.75	2.375	.530	1.75	2.687	9.500

RIGHT ANGLE ROW - PART NO. RAA 1250 -

1 1/4 / 1 1/4

Dash No.	A Ports	A NPT	B NPT	C	D	E	F	G DIA.	H	J	K
-4	4	1 1/4	1 1/4	3.50	7.37	2.00	3.370	.530	1.75	2.687	.000
-6	6	1 1/4	1 1/4	3.50	10.75	2.00	3.370	.530	1.75	2.687	3.375
-8	8	1 1/4	1 1/4	3.50	14.12	2.00	3.370	.530	1.75	2.687	7.125

RIGHT ANGLE ROW - PART NO. RA 1250 -

1 1/2 / 1 1/4

Dash No.	A Ports	A NPT	B NPT	C	D	E	F	G DIA.	H	J	K
-4	4	1 1/4	1 1/2	3.50	7.37	2.00	3.370	.530	1.75	2.687	.000
-6	6	1 1/4	1 1/2	3.50	10.75	2.00	3.370	.530	1.75	2.687	3.375
-8	8	1 1/4	1 1/2	3.50	14.12	2.00	3.370	.530	1.75	2.687	6.750

RIGHT ANGLE ROW - PART NO. RAL 1250 -
- Large Feeding Port 2" NPT

2 / 1 1/4

Dash No.	A Ports	A NPT	B NPT	C	D	E	F	G DIA.	H	J	K
-4	4	1 1/4	2	4.00	7.37	2.00	3.370	.530	2.00	3.187	.000
-6	6	1 1/4	2	4.00	10.75	2.00	3.370	.530	2.00	3.187	3.375
-8	8	1 1/4	2	4.00	14.12	2.00	3.370	.530	2.00	3.187	6.750

RIGHT ANGLE ROW - PART NO. RA 1500 -

2 / 1 1/2

Dash No.	A Ports	A NPT	B NPT	C	D	E	F	G DIA.	H	J	K
-4	4	1 1/2	2	4.00	8.25	2.250	3.750	.530	2.00	3.187	.000
-6	6	1 1/2	2	4.00	12.00	2.250	3.750	.530	2.00	3.187	3.750

B & R INDUSTRIES INC.
12 Commercial Blvd., Medford, N.Y. 11763
TEL. (631) 736-2275 • FAX (631) 736-2725
WEB - www.manifoldcenter.com • E-mail - sales@manifoldcenter.com

JUNCTION BLOCKS - NPT PORTING

Requirements not listed are quoted upon request.

TOP ONLY MOUNTING HOLES

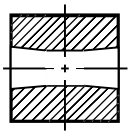

SECTION *X - X*

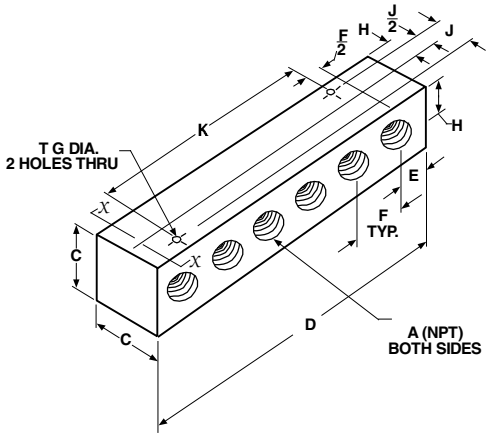

NPT PORTING IN/OUT

JUNCTION BLOCK - PART NO. J 125 -

1/8 NPT

Dash No.	A Ports	A NPT	C	D	E	F	G DIA.	H	J	K
-4	4	1/8	1.00	1.75	.50	.750	.171	.50	.700	.000
-6	6	1/8	1.00	2.50	.50	.750	.171	.50	.700	.750
-8	8	1/8	1.00	3.25	.50	.750	.171	.50	.700	1.500
-10	10	1/8	1.00	4.00	.50	.750	.171	.50	.700	2.250
-12	12	1/8	1.00	4.75	.50	.750	.171	.50	.700	3.000
-14	14	1/8	1.00	5.50	.50	.750	.171	.50	.700	3.750
-16	16	1/8	1.00	6.25	.50	.750	.171	.50	.700	4.500
-18	18	1/8	1.00	7.00	.50	.750	.171	.50	.700	5.250
-20	20	1/8	1.00	7.75	.50	.750	.171	.50	.700	6.000
-22	22	1/8	1.00	8.50	.50	.750	.171	.50	.700	6.750
-24	24	1/8	1.00	9.25	.50	.750	.171	.50	.700	7.500
-26	26	1/8	1.00	10.00	.50	.750	.171	.50	.700	8.250

JUNCTION BLOCK - PART NO. JI 125 -
Increased Center Distance 1.125 Inch

1/8 NPT

Dash No.	A Ports	A NPT	C	D	E	F	G DIA.	H	J	K
-4	4	1/8	1.00	2.12	.50	1.125	.171	.50	.700	.000
-6	6	1/8	1.00	3.25	.50	1.125	.171	.50	.700	1.125
-8	8	1/8	1.00	4.37	.50	1.125	.171	.50	.700	2.250
-10	10	1/8	1.00	5.50	.50	1.125	.171	.50	.700	3.375
-12	12	1/8	1.00	6.62	.50	1.125	.171	.50	.700	4.500
-14	14	1/8	1.00	7.75	.50	1.125	.171	.50	.700	5.625
-16	16	1/8	1.00	8.87	.50	1.125	.171	.50	.700	6.750
-18	18	1/8	1.00	10.00	.50	1.125	.171	.50	.700	7.875
-20	20	1/8	1.00	11.12	.50	1.125	.171	.50	.700	9.000

JUNCTION BLOCK - PART NO. J 250 -

1/4 NPT

Dash No.	A Ports	A NPT	C	D	E	F	G DIA.	H	J	K
-4	4	1/4	1.25	2.12	.62	.875	.203	.62	.890	.000
-6	6	1/4	1.25	3.00	.62	.875	.203	.62	.890	.875
-8	8	1/4	1.25	3.87	.62	.875	.203	.62	.890	1.750
-10	10	1/4	1.25	4.75	.62	.875	.203	.62	.890	2.625
-12	12	1/4	1.25	5.62	.62	.875	.203	.62	.890	3.500
-14	14	1/4	1.25	6.50	.62	.875	.203	.62	.890	4.375
-16	16	1/4	1.25	7.37	.62	.875	.203	.62	.890	5.250
-18	18	1/4	1.25	8.25	.62	.875	.203	.62	.890	6.125
-20	20	1/4	1.25	9.12	.62	.875	.203	.62	.890	7.000
-22	22	1/4	1.25	10.00	.62	.875	.203	.62	.890	7.875
-24	24	1/4	1.25	10.87	.62	.875	.203	.62	.890	8.750

JUNCTION BLOCK - PART NO. JI 250 -
Increased Center Distance 1.375 Inch

1/4 NPT

Dash No.	A Ports	A NPT	C	D	E	F	G DIA.	H	J	K
-4	4	1/4	1.25	2.62	.62	1.375	.203	.62	.890	.000
-6	6	1/4	1.25	4.00	.62	1.375	.203	.62	.890	1.375
-8	8	1/4	1.25	5.37	.62	1.375	.203	.62	.890	2.750
-10	10	1/4	1.25	6.75	.62	1.375	.203	.62	.890	4.125
-12	12	1/4	1.25	8.12	.62	1.375	.203	.62	.890	5.500
-14	14	1/4	1.25	9.50	.62	1.375	.203	.62	.890	6.875
-16	16	1/4	1.25	10.87	.62	1.375	.203	.62	.890	8.250

NPT PORTING IN/OUT

JUNCTION BLOCK - PART NO. J 375 -

3/8 NPT

Dash No.	A Ports	A NPT	C	D	E	F	G DIA.	H	J	K
-4	4	3/8	1.25	2.62	.75	1.125	.203	.625	.890	.000
-6	6	3/8	1.25	3.75	.75	1.125	.203	.625	.890	1.125
-8	8	3/8	1.25	4.87	.75	1.125	.203	.625	.890	2.250
-10	10	3/8	1.25	6.00	.75	1.125	.203	.625	.890	3.375
-12	12	3/8	1.25	7.12	.75	1.125	.203	.625	.890	4.500
-14	14	3/8	1.25	8.25	.75	1.125	.203	.625	.890	5.625
-16	16	3/8	1.25	9.37	.75	1.125	.203	.625	.890	6.750
-18	18	3/8	1.25	10.50	.75	1.125	.203	.625	.890	7.875
-20	20	3/8	1.25	11.62	.75	1.125	.203	.625	.890	9.000

JUNCTION BLOCK - PART NO. JI 375 -
TOPTOPIncreased Center Distance 1.500 Inch

3/8 NPT

Dash No.	A Ports	A NPT	C	D	E	F	G DIA.	H	J	K
-4	4	3/8	1.25	3.00	.75	1.500	.203	.625	.890	.000
-6	6	3/8	1.25	4.50	.75	1.500	.203	.625	.890	1.500
-8	8	3/8	1.25	6.00	.75	1.500	.203	.625	.890	3.000
-10	10	3/8	1.25	7.50	.75	1.500	.203	.625	.890	4.500
-12	12	3/8	1.25	9.00	.75	1.500	.203	.625	.890	6.000
-14	14	3/8	1.25	10.50	.75	1.500	.203	.625	.890	7.500
-16	16	3/8	1.25	12.00	.75	1.500	.203	.625	.890	9.000

JUNCTION BLOCK - PART NO. J 500 -

1/2 NPT

Dash No.	A Ports	A NPT	C	D	E	F	G DIA.	H	J	K
-4	4	1/2	1.75	3.12	.87	1.375	.280	.87	1.312	.000
-6	6	1/2	1.75	4.50	.87	1.375	.280	.87	1.312	1.375
-8	8	1/2	1.75	5.87	.87	1.375	.280	.87	1.312	2.750
-10	10	1/2	1.75	7.25	.87	1.375	.280	.87	1.312	4.125
-12	12	1/2	1.75	8.62	.87	1.375	.280	.87	1.312	5.500
-14	14	1/2	1.75	10.00	.87	1.375	.280	.87	1.312	6.875
-16	16	1/2	1.75	11.37	.87	1.375	.280	.87	1.312	8.250

JUNCTION BLOCK - PART NO. JI 500 -
Increased Center Distance 2.000 Inch

1/2 NPT

Dash No.	A Ports	A NPT	C	D	E	F	G DIA.	H	J	K
-4	4	1/2	1.75	3.75	.87	2.000	.280	.87	1.312	.000
-6	6	1/2	1.75	5.75	.87	2.000	.280	.87	1.312	2.000
-8	8	1/2	1.75	7.75	.87	2.000	.280	.87	1.312	4.000
-10	10	1/2	1.75	9.75	.87	2.000	.280	.87	1.312	6.000
-12	12	1/2	1.75	11.75	.87	2.000	.280	.87	1.312	8.000
-14	14	1/2	1.75	13.75	.87	2.000	.280	.87	1.312	10.000
-16	16	1/2	1.75	15.75	.87	2.000	.280	.87	1.312	12.000
-18	18	1/2	1.75	17.75	.87	2.000	.280	.87	1.312	14.000

JUNCTION BLOCKS - NPT PORTING

NPT PORTING IN/OUT

3/4 NPT

JUNCTION BLOCK - PART NO. J 750-

Dash No.	A Ports	A NPT	C	D	E	F	G DIA.	H	J	K
-4	4	3/4	2.00	3.75	1.00	1.750	.280	1.00	1.562	.000
-6	6	3/4	2.00	5.50	1.00	1.750	.280	1.00	1.562	1.750
-8	8	3/4	2.00	7.25	1.00	1.750	.280	1.00	1.562	3.500
-10	10	3/4	2.00	9.00	1.00	1.750	.280	1.00	1.562	5.250
-12	12	3/4	2.00	10.75	1.00	1.750	.280	1.00	1.562	7.000
-14	14	3/4	2.00	12.50	1.00	1.750	.280	1.00	1.562	8.750
-16	16	3/4	2.00	14.25	1.00	1.750	.280	1.00	1.562	10.500
-18	18	3/4	2.00	16.00	1.00	1.750	.280	1.00	1.562	12.250
-20	20	3/4	2.00	17.75	1.00	1.750	.280	1.00	1.562	14.000

3/4 NPT

JUNCTION BLOCK - PART NO. JI 750-
Increased Center Distance 2.75 Inch

Dash No.	A Ports	A NPT	C	D	E	F	G DIA.	H	J	K
-4	4	3/4	2.00	4.75	1.00	2.750	.280	1.00	1.562	.000
-6	6	3/4	2.00	7.50	1.00	2.750	.280	1.00	1.562	2.750
-8	8	3/4	2.00	10.25	1.00	2.750	.280	1.00	1.562	5.500
-10	10	3/4	2.00	13.00	1.00	2.750	.280	1.00	1.562	8.250
-12	12	3/4	2.00	15.75	1.00	2.750	.280	1.00	1.562	11.000
-14	14	3/4	2.00	18.50	1.00	2.750	.280	1.00	1.562	13.750
-16	16	3/4	2.00	21.25	1.00	2.750	.280	1.00	1.562	16.500
-18	18	3/4	2.00	24.00	1.00	2.750	.280	1.00	1.562	19.250
-20	20	3/4	2.00	26.75	1.00	2.750	.280	1.00	1.562	22.000

1 NPT

JUNCTION BLOCK - PART NO. J 1000-

Dash No.	A Ports	A NPT	C	D	E	F	G DIA.	H	J	K
-4	4	1	2.75	4.87	1.25	2.370	.340	1.37	2.125	.000
-6	6	1	2.75	7.25	1.25	2.370	.340	1.37	2.125	2.375
-8	8	1	2.75	9.62	1.25	2.370	.340	1.37	2.125	4.750
-10	10	1	2.75	12.00	1.25	2.370	.340	1.37	2.125	7.125
-12	12	1	2.75	14.37	1.25	2.370	.340	1.37	2.125	9.500
-14	14	1	2.75	16.75	1.25	2.370	.340	1.37	2.125	11.815
-16	16	1	2.75	19.12	1.25	2.370	.340	1.37	2.125	14.250
-18	18	1	2.75	21.50	1.25	2.370	.340	1.37	2.125	16.625
-20	20	1	2.75	23.87	1.25	2.370	.340	1.37	2.125	19.000

NPT PORTING IN/OUT

1 NPT

JUNCTION BLOCK - PART NO. JI 1000-
Increased Center Distance 3.50 Inch

Dash No.	A Ports	A NPT	C	D	E	F	G DIA.	H	J	K
-4	4	1	2.75	6.00	1.25	3.500	.340	1.37	2.125	.000
-6	6	1	2.75	9.50	1.25	3.500	.340	1.37	2.125	6.000
-8	8	1	2.75	13.00	1.25	3.500	.340	1.37	2.125	9.500
-10	10	1	2.75	16.50	1.25	3.500	.340	1.37	2.125	13.000
-12	12	1	2.75	20.00	1.25	3.500	.340	1.37	2.125	16.500
-14	14	1	2.75	23.50	1.25	3.500	.340	1.37	2.125	20.000
-16	16	1	2.75	27.00	1.25	3.500	.340	1.37	2.125	23.500
-18	18	1	2.75	30.50	1.25	3.500	.340	1.37	2.125	27.000

1¼ NPT

JUNCTION BLOCK - PART NO. J 1250-

Dash No.	A Ports	A NPT	C	D	E	F	G DIA.	H	J	K
-4	4	1¼	3.00	6.87	1.75	3.370	.340	1.50	2.375	.000
-6	6	1¼	3.00	10.25	1.75	3.370	.340	1.50	2.375	3.375
-8	8	1¼	3.00	13.62	1.75	3.370	.340	1.50	2.375	6.750
-10	10	1¼	3.00	17.00	1.75	3.370	.340	1.50	2.375	10.125
-12	12	1¼	3.00	20.37	1.75	3.370	.340	1.50	2.375	13.500
-14	14	1¼	3.00	23.75	1.75	3.370	.340	1.50	2.375	16.875
-16	16	1¼	3.00	27.12	1.75	3.370	.340	1.50	2.375	20.250

1½ NPT

JUNCTION BLOCK - PART NO. J 1500-

Dash No.	A Ports	A NPT	C	D	E	F	G DIA.	H	J	K
-4	4	1½	3.50	7.25	1.75	3.750	.530	1.750	2.687	.000
-6	6	1½	3.50	11.00	1.75	3.750	.530	1.750	2.687	3.750
-8	8	1½	3.50	14.75	1.75	3.750	.530	1.750	2.687	7.500
-10	10	1½	3.50	18.50	1.75	3.750	.530	1.750	2.687	11.250
-12	12	1½	3.50	22.25	1.75	3.750	.530	1.750	2.687	15.000
-14	14	1½	3.50	26.00	1.75	3.750	.530	1.750	2.687	18.750
-16	16	1½	3.50	29.75	1.75	3.750	.530	1.750	2.687	22.500

RIGHT ANGLE JUNCTION BLOCKS - NPT PORTING

NPT PORTING IN/OUT

1/8 NPT

RIGHT ANGLE JUNCTION BLOCK - PART NO. RAJ 125-

Dash No.	A Ports	A NPT	C	D	E	F	G DIA.	H	J	K
-4	4	1/8	1.00	1.75	.50	.750	.171	.50	.700	.000
-6	6	1/8	1.00	2.50	.50	.750	.171	.50	.700	.750
-8	8	1/8	1.00	3.25	.50	.750	.171	.50	.700	1.500
-10	10	1/8	1.00	4.00	.50	.750	.171	.50	.700	2.250
-12	12	1/8	1.00	4.75	.50	.750	.171	.50	.700	3.000
-14	14	1/8	1.00	5.50	.50	.750	.171	.50	.700	3.750
-16	16	1/8	1.00	6.25	.50	.750	.171	.50	.700	4.500
-18	18	1/8	1.00	7.00	.50	.750	.171	.50	.700	5.250
-20	20	1/8	1.00	7.75	.50	.750	.171	.50	.700	6.000
-22	22	1/8	1.00	8.50	.50	.750	.171	.50	.700	6.750
-24	24	1/8	1.00	9.25	.50	.750	.171	.50	.700	7.500
-26	26	1/8	1.00	10.00	.50	.750	.171	.50	.700	8.250

1/8 NPT

RIGHT ANGLE JUNCTION BLOCK - PART NO. RAJI 125-
Increased Center Distance 1.125 Inch

Dash No.	A Ports	A NPT	C	D	E	F	G DIA.	H	J	K
-4	4	1/8	1.00	2.12	.50	1.125	.171	.50	.700	.000
-6	6	1/8	1.00	3.25	.50	1.125	.171	.50	.700	1.125
-8	8	1/8	1.00	4.37	.50	1.125	.171	.50	.700	2.250
-10	10	1/8	1.00	5.50	.50	1.125	.171	.50	.700	3.375
-12	12	1/8	1.00	6.62	.50	1.125	.171	.50	.700	4.500
-14	14	1/8	1.00	7.75	.50	1.125	.171	.50	.700	5.625
-16	16	1/8	1.00	8.87	.50	1.125	.171	.50	.700	6.750
-18	18	1/8	1.00	10.00	.50	1.125	.171	.50	.700	7.875
-20	20	1/8	1.00	11.12	.50	1.125	.171	.50	.700	9.000

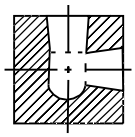

SECTION *X - X*

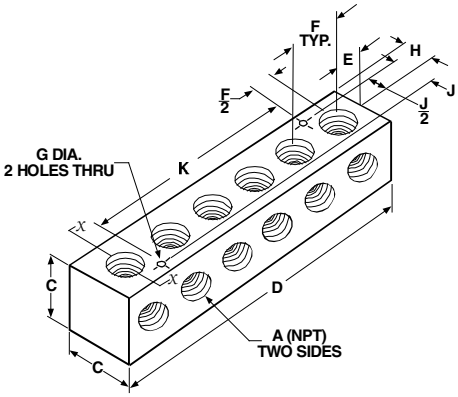

NPT PORTING IN/OUT

1/4 NPT

RIGHT ANGLE JUNCTION BLOCK - PART NO. RAJ 250-

Dash No.	A Ports	A NPT	C	D	E	F	G DIA.	H	J	K
-4	4	1/4	1.25	2.12	.62	.875	.203	.62	.890	.000
-6	6	1/4	1.25	3.00	.62	.875	.203	.62	.890	.875
-8	8	1/4	1.25	3.87	.62	.875	.203	.62	.890	1.750
-10	10	1/4	1.25	4.75	.62	.875	.203	.62	.890	2.625
-12	12	1/4	1.25	5.62	.62	.875	.203	.62	.890	3.500
-14	14	1/4	1.25	6.50	.62	.875	.203	.62	.890	4.375
-16	16	1/4	1.25	7.37	.62	.875	.203	.62	.890	5.250
-18	18	1/4	1.25	8.25	.62	.875	.203	.62	.890	6.125
-20	20	1/4	1.25	9.12	.62	.875	.203	.62	.890	7.000
-22	22	1/4	1.25	10.00	.62	.875	.203	.62	.890	7.875
-24	24	1/4	1.25	10.87	.62	.875	.203	.62	.890	8.750

continued next page

RIGHT ANGLE JUNCTION BLOCKS - NPT PORTING

Requirements not listed are quoted upon request.

NPT PORTING IN/OUT

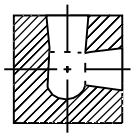

SECTION *X - X*

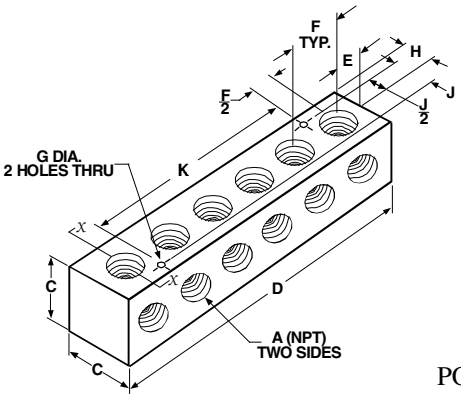

1/4 NPT

RIGHT ANGLE JUNCTION BLOCK - PART NO. RAJI 250 -
Increased Center Distance 1.375 Inch

Dash No.	A Ports	A NPT	C	D	E	F	G DIA.	H	J	K
-4	4	1/4	1.25	2.62	.62	1.375	.203	.62	.890	.000
-6	6	1/4	1.25	4.00	.62	1.375	.203	.62	.890	1.375
-8	8	1/4	1.25	5.37	.62	1.375	.203	.62	.890	2.750
-10	10	1/4	1.25	6.75	.62	1.375	.203	.62	.890	4.125
-12	12	1/4	1.25	8.12	.62	1.375	.203	.62	.890	5.500
-14	14	1/4	1.25	9.50	.62	1.375	.203	.62	.890	6.875
-16	16	1/4	1.25	10.87	.62	1.375	.203	.62	.890	8.250

3/8 NPT

RIGHT ANGLE JUNCTION BLOCK - PART NO. RAJ 375 -

Dash No.	A Ports	A NPT	C	D	E	F	G DIA.	H	J	K
-4	4	3/8	1.25	2.62	.75	1.125	.203	.62	.890	.000
-6	6	3/8	1.25	3.75	.75	1.125	.203	.62	.890	1.125
-8	8	3/8	1.25	4.87	.75	1.125	.203	.62	.890	2.250
-10	10	3/8	1.25	6.00	.75	1.125	.203	.62	.890	3.375
-12	12	3/8	1.25	7.12	.75	1.125	.203	.62	.890	4.500
-14	14	3/8	1.25	8.25	.75	1.125	.203	.62	.890	5.625
-16	16	3/8	1.25	9.37	.75	1.125	.203	.62	.890	6.750
-18	18	3/8	1.25	10.50	.75	1.125	.203	.62	.890	7.875
-20	20	3/8	1.25	11.62	.75	1.125	.203	.62	.890	9.000

3/8 NPT

RIGHT ANGLE JUNCTION BLOCK - PART NO. RAJI 375 -
Increased Center Distance 1.500 Inch

Dash No.	A Ports	A NPT	C	D	E	F	G DIA.	H	J	K
-4	4	3/8	1.25	3.00	.75	1.500	.203	.62	.890	.000
-6	6	3/8	1.25	4.50	.75	1.500	.203	.62	.890	1.500
-8	8	3/8	1.25	6.00	.75	1.500	.203	.62	.890	3.000
-10	10	3/8	1.25	7.50	.75	1.500	.203	.62	.890	4.500
-12	12	3/8	1.25	9.00	.75	1.500	.203	.62	.890	6.000
-14	14	3/8	1.25	10.50	.75	1.500	.203	.62	.890	7.500
-16	16	3/8	1.25	12.00	.75	1.500	.203	.62	.890	9.000

1/2 NPT

RIGHT ANGLE JUNCTION BLOCK - PART NO. RAJ 500 -

Dash No.	A Ports	A NPT	C	D	E	F	G DIA.	H	J	K
-4	4	1/2	1.75	3.12	.87	1.375	.280	.87	1.312	.000
-6	6	1/2	1.75	4.50	.87	1.375	.280	.87	1.312	1.375
-8	8	1/2	1.75	5.87	.87	1.375	.280	.87	1.312	2.750
-10	10	1/2	1.75	7.25	.87	1.375	.280	.87	1.312	4.125
-12	12	1/2	1.75	8.62	.87	1.375	.280	.87	1.312	5.500
-14	14	1/2	1.75	10.00	.87	1.375	.280	.87	1.312	6.875
-16	16	1/2	1.75	11.37	.87	1.375	.280	.87	1.312	8.250

1/2 NPT

RIGHT ANGLE JUNCTION BLOCK - PART NO. RAJI 500 -
Increased Center Distance 2.000 Inch

Dash No.	A Ports	A NPT	C	D	E	F	G DIA.	H	J	K
-4	4	1/2	1.75	3.75	.87	2.000	.280	.87	1.312	.000
-6	6	1/2	1.75	5.75	.87	2.000	.280	.87	1.312	2.000
-8	8	1/2	1.75	7.75	.87	2.000	.280	.87	1.312	4.000
-10	10	1/2	1.75	9.75	.87	2.000	.280	.87	1.312	6.000
-12	12	1/2	1.75	11.75	.87	2.000	.280	.87	1.312	8.000
-14	14	1/2	1.75	13.75	.87	2.000	.280	.87	1.312	10.000
-16	16	1/2	1.75	15.75	.87	2.000	.280	.87	1.312	12.000
-18	18	1/2	1.75	17.75	.87	2.000	.280	.87	1.312	14.000

3/4 NPT

RIGHT ANGLE JUNCTION BLOCK - PART NO. RAJ 750 -

Dash No.	A Ports	A NPT	C	D	E	F	G DIA.	H	J	K
-4	4	3/4	2.00	3.75	1.00	1.750	.280	1.00	1.562	.000
-6	6	3/4	2.00	5.50	1.00	1.750	.280	1.00	1.562	1.750
-8	8	3/4	2.00	7.25	1.00	1.750	.280	1.00	1.562	3.500
-10	10	3/4	2.00	9.00	1.00	1.750	.280	1.00	1.562	5.250
-12	12	3/4	2.00	10.75	1.00	1.750	.280	1.00	1.562	7.000
-14	14	3/4	2.00	12.50	1.00	1.750	.280	1.00	1.562	8.750
-16	16	3/4	2.00	14.25	1.00	1.750	.280	1.00	1.562	10.500
-18	18	3/4	2.00	16.00	1.00	1.750	.280	1.00	1.562	12.250
-20	20	3/4	2.00	17.75	1.00	1.750	.280	1.00	1.562	14.000

NPT PORTING IN/OUT

3/4 NPT

RIGHT ANGLE JUNCTION BLOCK - PART NO. RAJI 750 -
Increased Center Distance 2.75 Inch

Dash No.	A Ports	A NPT	C	D	E	F	G DIA.	H	J	K
-4	4	3/4	2.00	4.75	1.00	2.750	.280	1.00	1.562	.000
-6	6	3/4	2.00	7.50	1.00	2.750	.280	1.00	1.562	2.750
-8	8	3/4	2.00	10.25	1.00	2.750	.280	1.00	1.562	5.500
-10	10	3/4	2.00	13.00	1.00	2.750	.280	1.00	1.562	8.250
-12	12	3/4	2.00	15.75	1.00	2.750	.280	1.00	1.562	11.000
-14	14	3/4	2.00	18.50	1.00	2.750	.280	1.00	1.562	13.750
-16	16	3/4	2.00	21.25	1.00	2.750	.280	1.00	1.562	16.500
-18	18	3/4	2.00	24.00	1.00	2.750	.280	1.00	1.562	19.250
-20	20	3/4	2.00	26.75	1.00	2.750	.280	1.00	1.562	22.000

1 NPT

RIGHT ANGLE JUNCTION BLOCK - PART NO. RAJ 1000 -

Dash No.	A Ports	A NPT	C	D	E	F	G DIA.	H	J	K
-4	4	1	2.75	4.87	1.25	2.375	.340	1.370	2.125	.000
-6	6	1	2.75	7.25	1.25	2.375	.340	1.370	2.125	2.375
-8	8	1	2.75	9.62	1.25	2.375	.340	1.370	2.125	4.750
-10	10	1	2.75	12.00	1.25	2.375	.340	1.370	2.125	7.125
-12	12	1	2.75	14.37	1.25	2.375	.340	1.370	2.125	9.500
-14	14	1	2.75	16.75	1.25	2.375	.340	1.370	2.125	11.875
-16	16	1	2.75	19.12	1.25	2.375	.340	1.370	2.125	14.250
-18	18	1	2.75	21.50	1.25	2.375	.340	1.370	2.125	16.625
-20	20	1	2.75	23.87	1.25	2.375	.340	1.370	2.125	19.000

1 NPT

RIGHT ANGLE JUNCTION BLOCK - PART NO. RAJI 1000 -
Increased Center Distance 3.50 Inch

Dash No.	A Ports	A NPT	C	D	E	F	G DIA.	H	J	K
-4	4	1	2.75	6.00	1.25	3.500	.340	1.370	2.125	.000
-6	6	1	2.75	9.50	1.25	3.500	.340	1.370	2.125	6.000
-8	8	1	2.75	13.00	1.25	3.500	.340	1.370	2.125	9.500
-10	10	1	2.75	16.50	1.25	3.500	.340	1.370	2.125	13.000
-12	12	1	2.75	20.00	1.25	3.500	.340	1.370	2.125	16.500
-14	14	1	2.75	23.50	1.25	3.500	.340	1.370	2.125	20.000
-16	16	1	2.75	27.00	1.25	3.500	.340	1.370	2.125	23.500
-18	18	1	2.75	30.50	1.25	3.500	.340	1.370	2.125	27.000

1¼ NPT

RIGHT ANGLE JUNCTION BLOCK - PART NO. RAJ 1200 -

Dash No.	A Ports	A NPT	C	D	E	F	G DIA.	H	J	K
-4	4	1¼	3.00	6.87	1.75	3.375	.340	1.50	2.375	.000
-6	6	1¼	3.00	10.25	1.75	3.375	.340	1.50	2.375	3.375
-8	8	1¼	3.00	13.62	1.75	3.375	.340	1.50	2.375	6.750
-10	10	1¼	3.00	17.00	1.75	3.375	.340	1.50	2.375	10.125
-12	12	1¼	3.00	20.37	1.75	3.375	.340	1.50	2.375	13.500
-14	14	1¼	3.00	23.75	1.75	3.375	.340	1.50	2.375	16.875
-16	16	1¼	3.00	27.12	1.75	3.375	.340	1.50	2.375	20.250

1½ NPT

RIGHT ANGLE JUNCTION BLOCK - PART NO. RAJ 1500 -

Dash No.	A Ports	A NPT	C	D	E	F	G DIA.	H	J	K
-4	4	1½	3.50	7.25	1.75	3.750	.530	1.750	2.687	.000
-6	6	1½	3.50	11.00	1.75	3.750	.530	1.750	2.687	3.750
-8	8	1½	3.50	14.75	1.75	3.750	.530	1.750	2.687	7.500
-10	10	1½	3.50	18.50	1.75	3.750	.530	1.750	2.687	11.250
-12	12	1½	3.50	22.25	1.75	3.750	.530	1.750	2.687	15.000
-14	14	1½	3.50	26.00	1.75	3.750	.530	1.750	2.687	18.750
-16	16	1½	3.50	29.75	1.75	3.750	.530	1.750	2.687	22.500

B & R INDUSTRIES INC.
12 Commercial Blvd., Medford, N.Y. 11763
TEL. (631) 736-2275 • FAX (631) 736-2725
WEB - www.manifoldcenter.com • E-mail - sales@manifoldcenter.com

TERMINAL TEE BLOCKS - NPT PORTING

Requirements not listed are quoted upon request.

NPT PORTING IN/OUT

1/8 NPT

TERMINAL TEE BLOCK - PART NO. TT 125 -

Dash No.	A Ports	A NPT	C	D	E	F	G DIA.	H	J	K
-6	6	1/8	1.00	1.75	.50	.750	.171	.50	.700	.000
-9	9	1/8	1.00	2.50	.50	.750	.171	.50	.700	.750
-12	12	1/8	1.00	3.25	.50	.750	.171	.50	.700	1.500
-15	15	1/8	1.00	4.00	.50	.750	.171	.50	.700	2.250
-18	18	1/8	1.00	4.75	.50	.750	.171	.50	.700	3.000
-21	21	1/8	1.00	5.50	.50	.750	.171	.50	.700	3.750
-24	24	1/8	1.00	6.25	.50	.750	.171	.50	.700	4.500
-27	27	1/8	1.00	7.00	.50	.750	.171	.50	.700	5.250
-30	30	1/8	1.00	7.75	.50	.750	.171	.50	.700	6.000
-33	33	1/8	1.00	8.50	.50	.750	.171	.50	.700	6.750
-36	36	1/8	1.00	9.25	.50	.750	.171	.50	.700	7.500
-39	39	1/8	1.00	10.00	.50	.750	.171	.50	.700	8.250

1/8 NPT

TERMINAL TEE BLOCK - PART NO. TTI 125 -
Increased Center Distance 1.125 Inch

Dash No.	A Ports	A NPT	C	D	E	F	G DIA.	H	J	K
-6	6	1/8	1.00	2.12	.50	1.125	.171	.50	.700	.000
-9	9	1/8	1.00	3.25	.50	1.125	.171	.50	.700	1.125
-12	12	1/8	1.00	4.37	.50	1.125	.171	.50	.700	2.250
-15	15	1/8	1.00	5.50	.50	1.125	.171	.50	.700	3.375
-18	18	1/8	1.00	6.62	.50	1.125	.171	.50	.700	4.500
-21	21	1/8	1.00	7.75	.50	1.125	.171	.50	.700	5.625
-24	24	1/8	1.00	8.87	.50	1.125	.171	.50	.700	6.750
-27	27	1/8	1.00	10.00	.50	1.125	.171	.50	.700	7.875
-30	30	1/8	1.00	11.12	.50	1.125	.171	.50	.700	9.000

1/4 NPT

TERMINAL TEE BLOCK - PART NO. TT 250 -

Dash No.	A Ports	A NPT	C	D	E	F	G DIA.	H	J	K
-6	6	1/4	1.25	2.12	.62	.875	.203	.62	.890	.000
-9	9	1/4	1.25	3.00	.62	.875	.203	.62	.890	.875
-12	12	1/4	1.25	3.87	.62	.875	.203	.62	.890	1.750
-15	15	1/4	1.25	4.75	.62	.875	.203	62	.890	2.625
-18	18	1/4	1.25	5.62	.62	.875	.203	.62	.890	3.500
-21	21	1/4	1.25	6.50	.62	.875	.203	.62	.890	4.375
-24	24	1/4	1.25	7.37	.62	.875	.203	.62	.890	5.250
-27	27	1/4	1.25	8.25	.62	.875	.203	.62	.890	6.125
-30	30	1/4	1.25	9.12	.62	.875	.203	.62	.890	7.000
-33	33	1/4	1.25	10.00	.62	.875	.203	.62	.890	7.875
-36	36	1/4	1.25	10.87	.62	.875	.203	.62	.890	8.750

1/4 NPT

TERMINAL TEE BLOCK - PART NO. TTI 250 -
Increased Center Distance 1.375 Inch

Dash No.	A Ports	A NPT	C	D	E	F	G DIA.	H	J	K
-6	6	1/4	1.25	2.62	.62	1.375	.203	.62	.890	.000
-9	9	1/4	1.25	4.00	.62	1.375	.203	.62	.890	1.375
-12	12	1/4	1.25	5.37	.62	1.375	.203	.62	.890	2.750
-15	15	1/4	1.25	6.75	.62	1.375	.203	.62	.890	4.125
-18	18	1/4	1.25	8.12	.62	1.375	.203	.62	.890	5.500
-21	21	1/4	1.25	9.50	.62	1.375	.203	.62	.890	6.875
-24	24	1/4	1.25	10.87	.62	1.375	.203	.62	.890	8.250

3/8 NPT

TERMINAL TEE BLOCK - PART NO. TT 375 -

Dash No.	A Ports	A NPT	C	D	E	F	G DIA.	H	J	K
-6	6	3/8	1.25	2.62	.75	1.125	.203	.62	.890	.000
-9	9	3/8	1.25	3.75	.75	1.125	.203	.62	.890	1.125
-12	12	3/8	1.25	4.87	.75	1.125	.203	.62	.890	2.250
-15	15	3/8	1.25	6.00	.75	1.125	.203	.62	.890	3.375
-18	18	3/8	1.25	7.12	.75	1.125	.203	.62	.890	4.500
-21	21	3/8	1.25	8.25	.75	1.125	.203	.62	.890	5.625
-24	24	3/8	1.25	9.37	.75	1.125	.203	.62	.890	6.750
-27	27	3/8	1.25	10.50	.75	1.125	.203	.62	.890	7.875
-30	30	3/8	1.25	11.62	.75	1.125	.203	.62	.890	9.000

3/8 NPT

TERMINAL TEE BLOCK - PART NO. TTI 375 -
Increased Center Distance 1.500 Inch

Dash No.	A Ports	A NPT	C	D	E	F	G DIA.	H	J	K
-6	6	3/8	1.25	3.00	.75	1.500	.203	.62	.890	.000
-9	9	3/8	1.25	4.50	.75	1.500	.203	.62	.890	1.500
-12	12	3/8	1.25	6.00	.75	1.500	.203	.62	.890	3.000
-15	15	3/8	1.25	7.50	.75	1.500	.203	.62	.890	4.500
-18	18	3/8	1.25	9.00	.75	1.500	.203	.62	.890	6.000
-21	21	3/8	1.25	10.50	.75	1.500	.203	.62	.890	7.500
-24	24	3/8	1.25	12.00	.75	1.500	.203	.62	.890	9.000

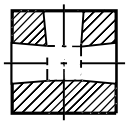

SECTION *X - X*

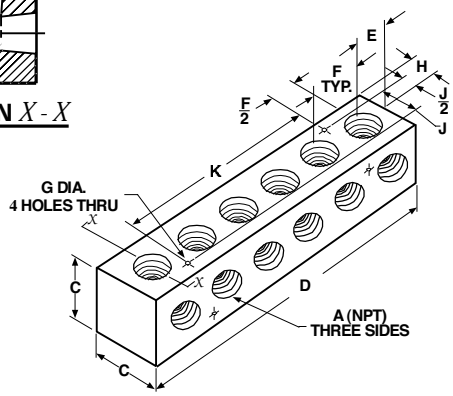

NPT PORTING IN/OUT

1/2 NPT

TERMINAL TEE BLOCK - PART NO. TT 500 -

Dash No.	A Ports	A NPT	C	D	E	F	G DIA.	H	J	K
-6	6	1/2	1.75	3.12	.87	1.375	.280	.87	1.312	.000
-9	9	1/2	1.75	4.50	.87	1.375	.280	.87	1.312	1.375
-12	12	1/2	1.75	5.87	.87	1.375	.280	.87	1.312	2.750
-15	15	1/2	1.75	7.25	.87	1.375	.280	.87	1.312	4.125
-18	18	1/2	1.75	8.62	.87	1.375	.280	.87	1.312	5.500
-21	21	1/2	1.75	10.00	.87	1.375	.280	.87	1.312	6.875
-24	24	1/2	1.75	11.37	.87	1.375	.280	.87	1.312	8.250

1/2 NPT

TERMINAL TEE BLOCK - PART NO. TTI 500 -
Increased Center Distance 2.000 Inch

Dash No.	A Ports	A NPT	C	D	E	F	G DIA.	H	J	K
-6	6	1/2	1.75	3.75	.87	2.000	.280	.87	1.312	.000
-9	9	1/2	1.75	5.75	.87	2.000	.280	.87	1.312	2.000
-12	12	1/2	1.75	7.75	.87	2.000	.280	.87	1.312	4.000
-15	15	1/2	1.75	9.75	.87	2.000	.280	.87	1.312	6.000
-18	18	1/2	1.75	11.75	.87	2.000	.280	.87	1.312	8.000
-21	21	1/2	1.75	13.75	.87	2.000	.280	.87	1.312	10.000
-24	24	1/2	1.75	15.75	.87	2.000	.280	.87	1.312	12.000

3/4 NPT

TERMINAL TEE BLOCK - PART NO. TT 750 -

Dash No.	A Ports	A NPT	C	D	E	F	G DIA.	H	J	K
-6	6	3/4	2.00	3.75	1.00	1.750	.280	1.00	1.562	.000
-9	9	3/4	2.00	5.50	1.00	1.750	.280	1.00	1.562	1.750
-12	12	3/4	2.00	7.25	1.00	1.750	.280	1.00	1.562	3.500
-15	15	3/4	2.00	9.00	1.00	1.750	.280	1.00	1.562	5.250
-18	18	3/4	2.00	10.75	1.00	1.750	.280	1.00	1.562	7.000
-21	21	3/4	2.00	12.50	1.00	1.750	.280	1.00	1.562	8.750
-24	24	3/4	2.00	14.25	1.00	1.750	.280	1.00	1.562	10.500

3/4 NPT

TERMINAL TEE BLOCK - PART NO. TTI 750 -
Increased Center Distance 2.75 Inch

Dash No.	A Ports	A NPT	C	D	E	F	G DIA.	H	J	K
-6	6	3/4	2.00	4.75	1.00	2.750	.280	1.00	1.562	.000
-9	9	3/4	2.00	7.50	1.00	2.750	.280	1.00	1.562	2.750
-12	12	3/4	2.00	10.25	1.00	2.750	.280	1.00	1.562	5.500
-15	15	3/4	2.00	13.00	1.00	2.750	.280	1.00	1.562	8.250
-18	18	3/4	2.00	15.75	1.00	2.750	.280	1.00	1.562	11.000
-21	21	3/4	2.00	18.50	1.00	2.750	.280	1.00	1.562	13.000
-24	24	3/4	2.00	21.25	1.00	2.750	.280	1.00	1.562	16.500

1 NPT

TERMINAL TEE BLOCK - PART NO. TT 1000 -

Dash No.	A Ports	A NPT	C	D	E	F	G DIA.	H	J	K
-6	6	1	2.75	4.87	1.25	2.375	.340	1.37	2.125	.000
-9	9	1	2.75	7.25	1.25	2.375	.340	1.37	2.125	2.375
-12	12	1	2.75	9.62	1.25	2.375	.340	1.37	2.125	4.750
-15	15	1	2.75	12.00	1.25	2.375	.340	1.37	2.125	7.125
-18	18	1	2.75	14.37	1.25	2.375	.340	1.37	2.125	9.500
-21	21	1	2.75	16.75	1.25	2.375	.340	1.37	2.125	11.875
-24	24	1	2.75	19.12	1.25	2.375	.340	1.37	2.125	14.250

continued next page

TERMINAL TEE BLOCKS - NPT PORTING

Requirements not listed are quoted upon request.

NPT PORTING IN/OUT

1 NPT

TERMINAL TEE BLOCK - PART NO. TTI 1000 -
Increased Center Distance 3.50 Inch

Dash No.	A Ports	A NPT	C	D	E	F	G DIA.	H	J	K
-6	6	1	2.75	6.00	1.25	3.500	.340	1.37	2.125	.000
-9	9	1	2.75	9.50	1.25	3.500	.340	1.37	2.125	6.000
-12	12	1	2.75	13.00	1.25	3.500	.340	1.37	2.125	9.500
-15	15	1	2.75	16.00	1.25	3.500	.340	1.37	2.125	13.000
-18	18	1	2.75	20.00	1.25	3.500	.340	1.37	2.125	16.500
-21	21	1	2.75	23.50	1.25	3.500	.340	1.37	2.125	20.000
-24	24	1	2.75	27.00	1.25	3.500	.340	1.37	2.125	23.500

1¼ NPT

TERMINAL TEE BLOCK - PART NO. TT 1250 -

Dash No.	A Ports	A NPT	C	D	E	F	G DIA.	H	J	K
-6	6	1¼	3.00	6.00	1.75	2.500	.340	1.50	2.375	.000
-9	9	1¼	3.00	8.50	1.75	2.500	.340	1.50	2.375	2.500
-12	12	1¼	3.00	11.00	1.75	2.500	.340	1.50	2.375	5.000
-15	15	1¼	3.00	13.50	1.75	2.500	.340	1.50	2.375	7.500
-18	18	1¼	3.00	16.00	1.75	2.500	.340	1.50	2.375	10.000
-21	21	1¼	3.00	18.50	1.75	2.500	.340	1.50	2.375	12.500

1¼ NPT

TERMINAL TEE BLOCK - PART NO. TTI 1250 -
Increased Center Distance 3.375 Inch

Dash No.	A Ports	A NPT	C	D	E	F	G DIA.	H	J	K
-6	6	1¼	3.00	6.87	1.75	3.375	.340	1.50	2.375	.000
-9	9	1¼	3.00	10.25	1.75	3.375	.340	1.50	2.375	3.375
-12	12	1¼	3.00	13.62	1.75	3.375	.340	1.50	2.375	6.750
-15	15	1¼	3.00	17.00	1.75	3.375	.340	1.50	2.375	10.125
-18	18	1¼	3.00	20.37	1.75	3.375	.340	1.50	2.375	13.500
-21	21	1¼	3.00	23.75	1.75	3.375	.340	1.50	2.375	16.875

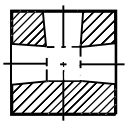

SECTION *X - X*

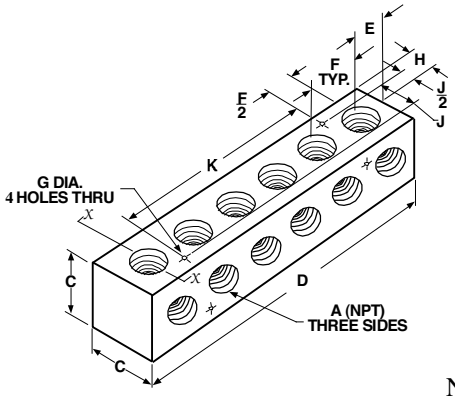

NPT PORTING IN/OUT

1½ NPT

TERMINAL TEE BLOCK - PART NO. TT 1500 -

Dash No.	A Ports	A NPT	C	D	E	F	G DIA.	H	J	K
-6	6	1½	3.50	7.25	1.75	3.750	.530	1.75	2.687	.000
-9	9	1½	3.50	11.00	1.75	3.750	.530	1.75	2.687	3.750
-12	12	1½	3.50	14.75	1.75	3.750	.530	1.75	2.687	7.500
-15	15	1½	3.50	18.50	1.75	3.750	.530	1.75	2.687	11.250
-18	18	1½	3.50	22.25	1.75	3.750	.530	1.75	2.687	15.000
-21	21	1½	3.50	26.00	1.75	3.750	.530	1.75	2.687	18.750
-24	24	1½	3.50	29.75	1.75	3.750	.530	1.75	2.687	22.500

JUNCTION BARS - NPT PORTING

MOUNTING HOLES: OPTIONAL AS NEEDED

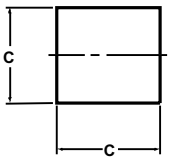

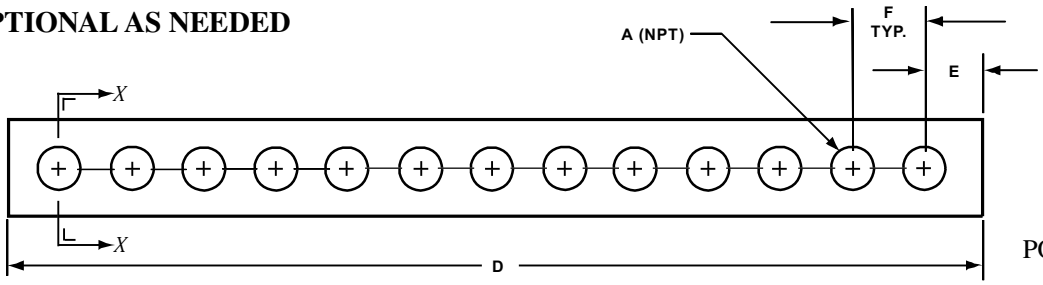

NPT PORTING IN/OUT

SECTION *X - X*

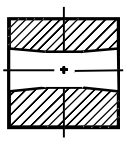

JUNCTION BAR - PART NO. JBI 125 -

Dash No.	A Ports	A NPT	C	D	E	F
- 64	64	1/8	1.00	35.87	.50	1.125
-128	128	1/8	1.00	71.87	.50	1.125

1/8 NPT

JUNCTION BAR - PART NO. JBI 250 -

Dash No.	A Ports	A NPT	C	D	E	F
-52	52	1/4	1.250	35.62	.62	1.375
-104	104	1/4	1.250	71.37	.62	1.375

1/4 NPT

SECTION *X - X*

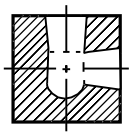

RIGHT ANGLE JUNCTION BAR - PART NO. RAJBI 125 -

Dash No.	A Ports	A NPT	C	D	E	F
- 64	64	1/8	1.00	35.87	.50	1.125
-128	128	1/8	1.00	71.87	.50	1.125

1/8 NPT

RIGHT ANGLE JUNCTION BAR - PART NO. RAJBI 250 -

Dash No.	A Ports	A NPT	C	D	E	F
-52	52	1/4	1.250	35.62	.62	1.375
-104	104	1/4	1.250	71.37	.62	1.375

1/4 NPT

B & R INDUSTRIES INC.
12 Commercial Blvd., Medford, N.Y. 11763
TEL. (631) 736-2275 • FAX (631) 736-2725
WEB - www.manifoldcenter.com • E-mail - sales@manifoldcenter.com

SINGLE ROW MANIFOLDS - SAE PORTING -

Requirements not listed are quoted upon request.

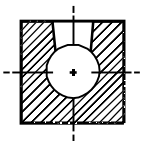

SECTION *X - X*

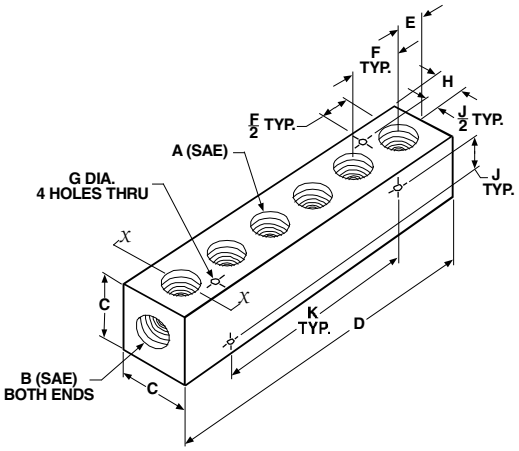

SAE PORTING IN/OUT

#6 / #4

SINGLE ROW - PART NO. S 4 -

Dash No.	A Ports	A SAE	B SAE	C	D	E	F	G DIA.	H	J	K
-2	2	#4	#6	1.50	3.87	1.06	1.750	.280	.75	1.062	.000
-3	3	#4	#6	1.50	5.62	1.06	1.750	.280	.75	1.062	1.750
-4	4	#4	#6	1.50	7.37	1.06	1.750	.280	.75	1.062	3.500
-5	5	#4	#6	1.50	9.12	1.06	1.750	.280	.75	1.062	5.250
-6	6	#4	#6	1.50	10.87	1.06	1.750	.280	.75	1.062	7.000
-7	7	#4	#6	1.50	12.62	1.06	1.750	.280	.75	1.062	8.750
-8	8	#4	#6	1.50	14.37	1.06	1.750	.280	.75	1.062	10.500
-9	9	#4	#6	1.50	16.12	1.06	1.750	.280	.75	1.062	12.250
-10	10	#4	#6	1.50	17.87	1.06	1.750	.280	.75	1.062	14.000
-11	11	#4	#6	1.50	19.62	1.06	1.750	.280	.75	1.062	15.750
-12	12	#4	#6	1.50	21.37	1.06	1.750	.280	.75	1.062	17.500

#8 / #6

SINGLE ROW - PART NO. S 6 -

Dash No.	A Ports	A SAE	B SAE	C	D	E	F	G DIA.	H	J	K
-2	2	#6	#8	1.75	4.50	1.25	2.000	.280	.87	1.312	.000
-3	3	#6	#8	1.75	6.50	1.25	2.000	.280	.87	1.312	2.000
-4	4	#6	#8	1.75	8.50	1.25	2.000	.280	.87	1.312	4.000
-5	5	#6	#8	1.75	10.50	1.25	2.000	.280	.87	1.312	6.000
-6	6	#6	#8	1.75	12.50	1.25	2.000	.280	.87	1.312	8.000
-7	7	#6	#8	1.75	14.50	1.25	2.000	.280	.87	1.312	10.000
-8	8	#6	#8	1.75	16.50	1.25	2.000	.280	.87	1.312	12.000
-9	9	#6	#8	1.75	18.50	1.25	2.000	.280	.87	1.312	14.000
-10	10	#6	#8	1.75	20.50	1.25	2.000	.280	.87	1.312	16.000
-11	11	#6	#8	1.75	22.50	1.25	2.000	.280	.87	1.312	18.000
-12	12	#6	#8	1.75	24.50	1.25	2.000	.280	.87	1.312	20.000

#12 / #8

SINGLE ROW - PART NO. S 8 -

Dash No.	A Ports	A SAE	B SAE	C	D	E	F	G DIA.	H	J	K
-2	2	#8	#12	2.00	5.37	1.50	2.370	.280	1.00	1.562	.000
-3	3	#8	#12	2.00	7.75	1.50	2.370	.280	1.00	1.562	2.375
-4	4	#8	#12	2.00	10.12	1.50	2.370	.280	1.00	1.562	4.750
-5	5	#8	#12	2.00	12.50	1.50	2.370	.280	1.00	1.562	7.125
-6	6	#8	#12	2.00	14.87	1.50	2.370	.280	1.00	1.562	9.500
-7	7	#8	#12	2.00	17.25	1.50	2.370	.280	1.00	1.562	11.875
-8	8	#8	#12	2.00	19.62	1.50	2.370	.280	1.00	1.562	14.250
-9	9	#8	#12	2.00	22.00	1.50	2.370	.280	1.00	1.562	16.625
-10	10	#8	#12	2.00	24.37	1.50	2.370	.280	1.00	1.562	19.000
-11	11	#8	#12	2.00	26.75	1.50	2.370	.280	1.00	1.562	21.375
-12	12	#8	#12	2.00	29.12	1.50	2.370	.280	1.00	1.562	23.750

SAE PORTING IN/OUT

#16 / #12

SINGLE ROW - PART NO. S 12 -

Dash No.	A Ports	A SAE	B SAE	C	D	E	F	G DIA.	H	J	K
-2	2	#12	#16	2.50	6.75	1.75	3.250	.340	1.25	1.937	.000
-3	3	#12	#16	2.50	10.00	1.75	3.250	.340	1.25	1.937	3.250
-4	4	#12	#16	2.50	13.25	1.75	3.250	.340	1.25	1.937	6.500
-5	5	#12	#16	2.50	16.50	1.75	3.250	.340	1.25	1.937	9.750
-6	6	#12	#16	2.50	19.75	1.75	3.250	.340	1.25	1.937	13.000
-7	7	#12	#16	2.50	23.00	1.75	3.250	.340	1.25	1.937	16.250
-8	8	#12	#16	2.50	26.25	1.75	3.250	.340	1.25	1.937	19.500
-9	9	#12	#16	2.50	29.50	1.75	3.250	.340	1.25	1.937	22.750
-10	10	#12	#16	2.50	32.75	1.75	3.250	.340	1.25	1.937	26.000

#20 / #16

SINGLE ROW - PART NO. S 16 -

Dash No.	A Ports	A SAE	B SAE	C	D	E	F	G DIA.	H	J	K
-2	2	#16	#20	3.00	7.37	1.81	3.750	.340	1.50	2.375	.000
-3	3	#16	#20	3.00	11.12	1.81	3.750	.340	1.50	2.375	3.750
-4	4	#16	#20	3.00	14.87	1.81	3.750	.340	1.50	2.375	7.500
-5	5	#16	#20	3.00	18.62	1.81	3.750	.340	1.50	2.375	11.250
-6	6	#16	#20	3.00	22.37	1.81	3.750	.340	1.50	2.375	15.000
-7	7	#16	#20	3.00	26.12	1.81	3.750	.340	1.50	2.375	18.750
-8	8	#16	#20	3.00	29.87	1.81	3.750	.340	1.50	2.375	22.500

#24 / #20

SINGLE ROW - PART NO. S 20 -

Dash No.	A Ports	A SAE	B SAE	C	D	E	F	G DIA.	H	J	K
-2	2	#20	#24	3.50	8.50	2.25	4.000	.530	1.75	2.687	.000
-3	3	#20	#24	3.50	12.50	2.25	4.000	.530	1.75	2.687	4.000
-4	4	#20	#24	3.50	16.50	2.25	4.000	.530	1.75	2.687	8.000
-5	5	#20	#24	3.50	20.50	2.25	4.000	.530	1.75	2.687	12.000
-6	6	#20	#24	3.50	24.50	2.25	4.000	.530	1.75	2.687	16.000

#32 / #24

SINGLE ROW - PART NO. S 24 -

Dash No.	B Ports	A SAE	B SAE	C	D	E	F	G DIA.	H	J	K
-2	2	#24	#32	4.00	10.00	2.50	5.000	.530	2.00	3.187	.000
-3	3	#24	#32	4.00	15.00	2.50	5.000	.530	2.00	3.187	5.000
-4	4	#24	#32	4.00	20.00	2.50	5.000	.530	2.00	3.187	10.000
-5	5	#24	#32	4.00	25.00	2.50	5.000	.530	2.00	3.187	15.000

B & R INDUSTRIES INC.
12 Commercial Blvd., Medford, N.Y. 11763
TEL. (631) 736-2275 • FAX (631) 736-2725
WEB - www.manifoldcenter.com • E-mail - sales@manifoldcenter.com

DOUBLE ROW MANIFOLDS - SAE PORTING -

Requirements not listed are quoted upon request.

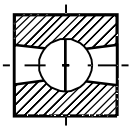

SECTION *X - X*

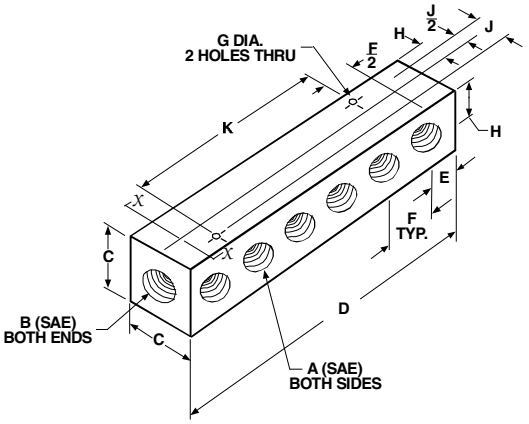

SAE PORTING IN/OUT

#6 / #4

DOUBLE ROW - PART NO. D 4 -

Dash No.	A Ports	A SAE	B SAE	C	D	E	F	G DIA.	H	J	K
-4	4	#4	#6	1.50	3.87	1.06	1.750	.280	.75	1.062	.000
-6	6	#4	#6	1.50	5.62	1.06	1.750	.280	.75	1.062	1.750
-8	8	#4	#6	1.50	7.37	1.06	1.750	.280	.75	1.062	3.500
-10	10	#4	#6	1.50	9.12	1.06	1.750	.280	.75	1.062	5.250
-12	12	#4	#6	1.50	10.87	1.06	1.750	.280	.75	1.062	7.000
-14	14	#4	#6	1.50	12.62	1.06	1.750	.280	.75	1.062	8.750
-16	16	#4	#6	1.50	14.37	1.06	1.750	.280	.75	1.062	10.500
-18	18	#4	#6	1.50	16.12	1.06	1.750	.280	.75	1.062	12.250
-20	20	#4	#6	1.50	17.87	1.06	1.750	.280	.75	1.062	14.000
-22	22	#4	#6	1.50	19.62	1.06	1.750	.280	.75	1.062	15.750
-24	24	#4	#6	1.50	21.37	1.06	1.750	.280	.75	1.062	17.500

#8 / #6

DOUBLE ROW - PART NO. D 6 -

Dash No.	A Ports	A SAE	B SAE	C	D	E	F	G DIA.	H	J	K
-4	4	#6	#8	1.75	4.50	1.25	2.000	.280	.87	1.312	.000
-6	6	#6	#8	1.75	6.50	1.25	2.000	.280	.87	1.312	2.000
-8	8	#6	#8	1.75	8.50	1.25	2.000	.280	.87	1.312	4.000
-10	10	#6	#8	1.75	10.50	1.25	2.000	.280	.87	1.312	6.000
-12	12	#6	#8	1.75	12.50	1.25	2.000	.280	.87	1.312	8.000
-14	14	#6	#8	1.75	14.50	1.25	2.000	.280	.87	1.312	10.000
-16	16	#6	#8	1.75	16.50	1.25	2.000	.280	.87	1.312	12.000
-18	18	#6	#8	1.75	18.50	1.25	2.000	.280	.87	1.312	14.000
-20	20	#6	#8	1.75	20.50	1.25	2.000	.280	.87	1.312	16.000
-22	22	#6	#8	1.75	22.50	1.25	2.000	.280	.87	1.312	18.000
-24	24	#6	#8	1.75	24.50	1.25	2.000	.280	.87	1.312	20.000

#12 / #8

DOUBLE ROW - PART NO. D 8 -

Dash No.	A Ports	A SAE	B SAE	C	D	E	F	G DIA.	H	J	K
-4	4	#8	#12	2.00	5.37	1.50	2.370	.280	1.00	1.562	.000
-6	6	#8	#12	2.00	7.75	1.50	2.370	.280	1.00	1.562	2.375
-8	8	#8	#12	2.00	10.12	1.50	2.370	.280	1.00	1.562	4.750
-10	10	#8	#12	2.00	12.50	1.50	2.370	.280	1.00	1.562	7.125
-12	12	#8	#12	2.00	14.87	1.50	2.370	.280	1.00	1.562	9.500
-14	14	#8	#12	2.00	17.25	1.50	2.370	.280	1.00	1.562	11.875
-16	16	#8	#12	2.00	19.62	1.50	2.370	.280	1.00	1.562	14.250
-18	18	#8	#12	2.00	22.00	1.50	2.370	.280	1.00	1.562	16.625
-20	20	#8	#12	2.00	24.37	1.50	2.370	.280	1.00	1.562	19.000
-22	22	#8	#12	2.00	26.75	1.50	2.370	.280	1.00	1.562	21.375
-24	24	#8	#12	2.00	29.12	1.50	2.370	.280	1.00	1.562	23.750

SAE PORTING IN/OUT

#16 / #12

DOUBLE ROW - PART NO. D 12 -

Dash No.	A Ports	A SAE	B SAE	C	D	E	F	G DIA.	H	J	K
-4	4	#12	#16	2.50	6.75	1.75	3.250	.340	1.25	1.937	.000
-6	6	#12	#16	2.50	10.00	1.75	3.250	.340	1.25	1.937	3.250
-8	8	#12	#16	2.50	13.25	1.75	3.250	.340	1.25	1.937	6.500
-10	10	#12	#16	2.50	16.50	1.75	3.250	.340	1.25	1.937	9.750
-12	12	#12	#16	2.50	19.75	1.75	3.250	.340	1.25	1.937	13.000
-14	14	#12	#16	2.50	23.00	1.75	3.250	.340	1.25	1.937	16.250
-16	16	#12	#16	2.50	26.25	1.75	3.250	.340	1.25	1.937	19.500
-18	18	#12	#16	2.50	29.50	1.75	3.250	.340	1.25	1.937	22.750
-20	20	#12	#16	2.50	32.75	1.75	3.250	.340	1.25	1.937	26.000

#20 / #16

DOUBLE ROW - PART NO. D 16 -

Dash No.	A Ports	A SAE	B SAE	C	D	E	F	G DIA.	H	J	K
-4	4	#16	#20	3.00	7.37	1.81	3.750	.340	1.50	2.375	.000
-6	6	#16	#20	3.00	11.12	1.81	3.750	.340	1.50	2.375	3.750
-8	8	#16	#20	3.00	14.87	1.81	3.750	.340	1.50	2.375	7.500
-10	10	#16	#20	3.00	18.62	1.81	3.750	.340	1.50	2.375	11.250
-12	12	#16	#20	3.00	22.37	1.81	3.750	.340	1.50	2.375	15.000
-14	14	#16	#20	3.00	26.12	1.81	3.750	.340	1.50	2.375	18.750
-16	16	#16	#20	3.00	29.87	1.81	3.750	.340	1.50	2.375	22.500

#24 / #20

DOUBLE ROW - PART NO. D 20 -

Dash No.	A Ports	A SAE	B SAE	C	D	E	F	G DIA.	H	J	K
-4	4	#20	#24	3.50	8.50	2.25	4.000	.530	1.75	2.687	.000
-6	6	#20	#24	3.50	12.50	2.25	4.000	.530	1.75	2.687	4.000
-8	8	#20	#24	3.50	16.50	2.25	4.000	.530	1.75	2.687	8.000
-10	10	#20	#24	3.50	20.50	2.25	4.000	.530	1.75	2.687	12.000
-12	12	#20	#24	3.50	24.50	2.25	4.000	.530	1.75	2.687	16.000

#32 / #24

DOUBLE ROW - PART NO. D 24 -

Dash No.	A Ports	A SAE	B SAE	C	D	E	F	G DIA.	H	J	K
-4	4	#24	#32	4.00	10.00	2.50	5.000	.530	2.00	3.187	.000
-6	6	#24	#32	4.00	15.00	2.50	5.000	.530	2.00	3.187	5.000
-8	8	#24	#32	4.00	20.00	2.50	5.000	.530	2.00	3.187	10.000
-10	10	#24	#32	4.00	25.00	2.50	5.000	.530	2.00	3.187	15.000

RIGHT ANGLE ROW MANIFOLDS - SAE PORTING -

Requirements not listed are quoted upon request.

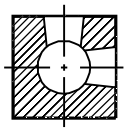

SECTION *X - X*

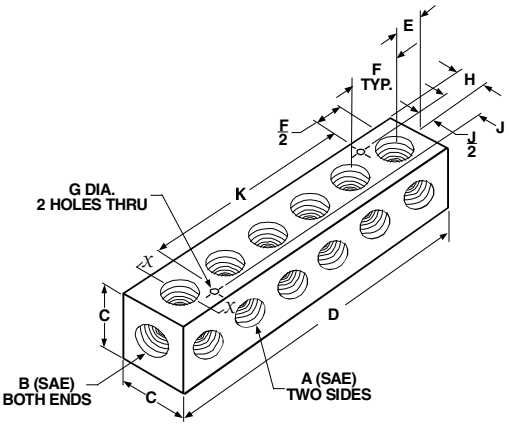

SAE PORTING IN/OUT

#6 / #4

RIGHT ANGLE ROW - PART NO. RA 4 -

Dash No.	A Ports	A SAE	B SAE	C	D	E	F	G DIA.	H	J	K
-4	4	#4	#6	1.50	3.87	1.06	1.750	.280	.75	1.062	.000
-6	6	#4	#6	1.50	5.62	1.06	1.750	.280	.75	1.062	1.750
-8	8	#4	#6	1.50	7.37	1.06	1.750	.280	.75	1.062	3.500
-10	10	#4	#6	1.50	9.12	1.06	1.750	.280	.75	1.062	5.250
-12	12	#4	#6	1.50	10.87	1.06	1.750	.280	.75	1.062	7.000
-14	14	#4	#6	1.50	12.62	1.06	1.750	.280	.75	1.062	8.750
-16	16	#4	#6	1.50	14.37	1.06	1.750	.280	.75	1.062	10.500
-18	18	#4	#6	1.50	16.12	1.06	1.750	.280	.75	1.062	12.250
-20	20	#4	#6	1.50	17.87	1.06	1.750	.280	.75	1.062	14.000
-22	22	#4	#6	1.50	19.62	1.06	1.750	.280	.75	1.062	15.750
-24	24	#4	#6	1.50	21.37	1.06	1.750	.280	.75	1.062	17.500

#8 / #6

RIGHT ANGLE ROW - PART NO. RA 6 -

Dash No.	A Ports	A SAE	B SAE	C	D	E	F	G DIA.	H	J	K
-4	4	#6	#8	1.75	4.50	1.25	2.000	.280	.87	1.312	.000
-6	6	#6	#8	1.75	6.50	1.25	2.000	.280	.87	1.312	2.000
-8	8	#6	#8	1.75	8.50	1.25	2.000	.280	.87	1.312	4.000
-10	10	#6	#8	1.75	10.50	1.25	2.000	.280	.87	1.312	6.000
-12	12	#6	#8	1.75	12.50	1.25	2.000	.280	.87	1.312	8.000
-14	14	#6	#8	1.75	14.50	1.25	2.000	.280	.87	1.312	10.000
-16	16	#6	#8	1.75	16.50	1.25	2.000	.280	.87	1.312	12.000
-18	18	#6	#8	1.75	18.50	1.25	2.000	.280	.87	1.312	14.000
-20	20	#6	#8	1.75	20.50	1.25	2.000	.280	.87	1.312	16.000
-22	22	#6	#8	1.75	22.50	1.25	2.000	.280	.87	1.312	18.000
-24	24	#6	#8	1.75	24.50	1.25	2.000	.280	.87	1.312	20.000

#12 / #8

RIGHT ANGLE ROW - PART NO. RA 8 -

Dash No.	A Ports	A SAE	B SAE	C	D	E	F	G DIA.	H	J	K
-4	4	#8	#12	2.00	5.37	1.50	2.370	.280	1.00	1.562	.000
-6	6	#8	#12	2.00	7.75	1.50	2.370	.280	1.00	1.562	2.375
-8	8	#8	#12	2.00	10.12	1.50	2.370	.280	1.00	1.562	4.750
-10	10	#8	#12	2.00	12.50	1.50	2.370	.280	1.00	1.562	7.125
-12	12	#8	#12	2.00	14.87	1.50	2.370	.280	1.00	1.562	9.500
-14	14	#8	#12	2.00	17.25	1.50	2.370	.280	1.00	1.562	11.875
-16	16	#8	#12	2.00	19.62	1.50	2.370	.280	1.00	1.562	14.250
-18	18	#8	#12	2.00	22.00	1.50	2.370	.280	1.00	1.562	16.625
-20	20	#8	#12	2.00	24.37	1.50	2.370	.280	1.00	1.562	19.000
-22	22	#8	#12	2.00	26.75	1.50	2.370	.280	1.00	1.562	21.375
-24	24	#8	#12	2.00	29.12	1.50	2.370	.280	1.00	1.562	23.750

SAE PORTING IN/OUT

#16 / #12

RIGHT ANGLE ROW - PART NO. RA 12 -

Dash No.	A Ports	A SAE	B SAE	C	D	E	F	G DIA.	H	J	K
-4	4	#12	#16	2.50	6.75	1.75	3.250	.340	1.25	1.937	.000
-6	6	#12	#16	2.50	10.00	1.75	3.250	.340	1.25	1.937	3.250
-8	8	#12	#16	2.50	13.25	1.75	3.250	.340	1.25	1.937	6.500
-10	10	#12	#16	2.50	16.50	1.75	3.250	.340	1.25	1.937	9.750
-12	12	#12	#16	2.50	19.75	1.75	3.250	.340	1.25	1.937	13.000
-14	14	#12	#16	2.50	23.00	1.75	3.250	.340	1.25	1.937	16.250
-16	16	#12	#16	2.50	26.25	1.75	3.250	.340	1.25	1.937	19.500
-18	18	#12	#16	2.50	29.50	1.75	3.250	.340	1.25	1.937	22.750

#20 / #16

RIGHT ANGLE ROW - PART NO. RA 16 -

Dash No.	A Ports	A SAE	B SAE	C	D	E	F	G DIA.	H	J	K
-4	4	#16	#20	3.00	7.37	1.81	3.750	.340	1.50	2.375	.000
-6	6	#16	#20	3.00	11.12	1.81	3.750	.340	1.50	2.375	3.750
-8	8	#16	#20	3.00	14.87	1.81	3.750	.340	1.50	2.375	7.500
-10	10	#16	#20	3.00	18.62	1.81	3.750	.340	1.50	2.375	11.250
-12	12	#16	#20	3.00	22.37	1.81	3.750	.340	1.50	2.375	15.000
-14	14	#16	#20	3.00	26.12	1.81	3.750	.340	1.50	2.375	18.750
-16	16	#16	#20	3.00	29.87	1.81	3.750	.340	1.50	2.375	22.500

#24 / #20

RIGHT ANGLE ROW - PART NO. RA 20 -

Dash No.	A Ports	A SAE	B SAE	C	D	E	F	G DIA.	H	J	K
-4	4	#20	#24	3.50	8.50	2.25	4.000	.530	1.75	2.687	.000
-6	6	#20	#24	3.50	12.50	2.25	4.000	.530	1.75	2.687	4.000
-8	8	#20	#24	3.50	16.50	2.25	4.000	.530	1.75	2.687	8.000
-10	10	#20	#24	3.50	20.50	2.25	4.000	.530	1.75	2.687	12.000

#32 / #24

RIGHT ANGLE ROW - PART NO. RA 24 -

Dash No.	B Ports	A SAE	B SAE	C	D	E	F	G DIA.	H	J	K
-4	4	#24	#32	4.00	10.00	2.50	5.000	.530	2.00	3.187	.000
-6	6	#24	#32	4.00	15.00	2.50	5.000	.530	2.00	3.187	5.000
-8	8	#24	#32	4.00	20.00	2.50	5.000	.530	2.00	3.187	10.000
-10	10	#24	#32	4.00	25.00	2.50	5.000	.530	2.00	3.187	15.000

JUNCTION BLOCKS - SAE PORTING

Requirements not listed are quoted upon request.

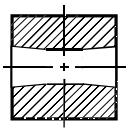

SECTION *X - X*

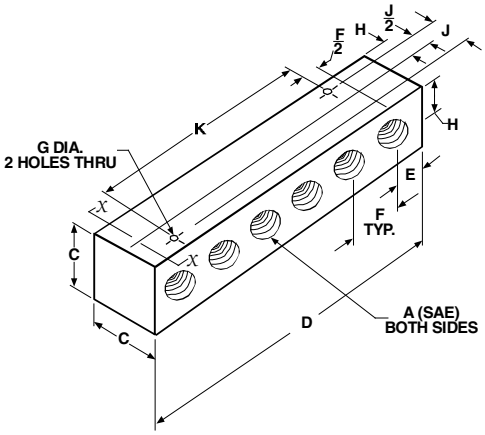

SAE PORTING IN/OUT

#4 SAE

JUNCTION BLOCK - PART NO. J 4 -

Dash No.	A Ports	A SAE	C	D	E	F	G DIA.	H	J	K
-4	4	#4	1.50	3.87	1.06	1.750	.280	.75	1.062	.000
-6	6	#4	1.50	5.62	1.06	1.750	.280	.75	1.062	1.750
-8	8	#4	1.50	7.37	1.06	1.750	.280	.75	1.062	3.500
-10	10	#4	1.50	9.12	1.06	1.750	.280	.75	1.062	5.250
-12	12	#4	1.50	10.87	1.06	1.750	.280	.75	1.062	7.000
-14	14	#4	1.50	12.62	1.06	1.750	.280	.75	1.062	8.750
-16	16	#4	1.50	14.37	1.06	1.750	.280	.75	1.062	10.500
-18	18	#4	1.50	16.12	1.06	1.750	.280	.75	1.062	12.250
-20	20	#4	1.50	17.87	1.06	1.750	.280	.75	1.062	14.000
-22	22	#4	1.50	19.62	1.06	1.750	.280	.75	1.062	15.750
-24	24	#4	1.50	21.37	1.06	1.750	.280	.75	1.062	17.500

#6 SAE

JUNCTION BLOCK - PART NO. J 6 -

Dash No.	A Ports	A SAE	C	D	E	F	G DIA.	H	J	K
-4	4	#6	1.75	4.50	1.25	2.000	.280	.87	1.312	.000
-6	6	#6	1.75	6.50	1.25	2.000	.280	.87	1.312	2.000
-8	8	#6	1.75	8.50	1.25	2.000	.280	.87	1.312	4.000
-10	10	#6	1.75	10.50	1.25	2.000	.280	.87	1.312	6.000
-12	12	#6	1.75	12.50	1.25	2.000	.280	.87	1.312	8.000
-14	14	#6	1.75	14.50	1.25	2.000	.280	.87	1.312	10.000
-16	16	#6	1.75	16.50	1.25	2.000	.280	.87	1.312	12.000
-18	18	#6	1.75	18.50	1.25	2.000	.280	.87	1.312	14.000
-20	20	#6	1.75	20.50	1.25	2.000	.280	.87	1.312	16.000
-22	22	#6	1.75	22.50	1.25	2.000	.280	.87	1.312	18.000
-24	24	#6	1.75	24.50	1.25	2.000	.280	.87	1.312	20.000

#8 SAE

JUNCTION BLOCK - PART NO. J 8 -

Dash No.	A Ports	A SAE	C	D	E	F	G DIA.	H	J	K
-4	4	#8	2.00	5.37	1.50	2.375	.280	1.00	1.562	.000
-6	6	#8	2.00	7.75	1.50	2.375	.280	1.00	1.562	2.375
-8	8	#8	2.00	10.12	1.50	2.375	.280	1.00	1.562	4.750
-10	10	#8	2.00	12.50	1.50	2.375	.280	1.00	1.562	7.125
-12	12	#8	2.00	14.87	1.50	2.375	.280	1.00	1.562	9.500
-14	14	#8	2.00	17.25	1.50	2.375	.280	1.00	1.562	11.875
-16	16	#8	2.00	19.62	1.50	2.375	.280	1.00	1.562	14.250
-18	18	#8	2.00	22.00	1.50	2.375	.280	1.00	1.562	16.625
-20	20	#8	2.00	24.37	1.50	2.375	.280	1.00	1.562	19.000
-22	22	#8	2.00	26.75	1.50	2.375	.280	1.00	1.562	21.375
-24	24	#8	2.00	29.12	1.50	2.375	.280	1.00	1.562	23.375

SAE PORTING IN/OUT

#12 SAE

JUNCTION BLOCK - PART NO. J 12 -

Dash No.	A Ports	A SAE	C	D	E	F	G DIA.	H	J	K
-4	4	#12	2.50	6.75	1.75	3.250	.340	1.25	1.937	.000
-6	6	#12	2.50	10.00	1.75	3.250	.340	1.25	1.937	3.250
-8	8	#12	2.50	13.25	1.75	3.250	.340	1.25	1.937	6.500
-10	10	#12	2.50	16.50	1.75	3.250	.340	1.25	1.937	9.750
-12	12	#12	2.50	19.75	1.75	3.250	.340	1.25	1.937	13.000
-14	14	#12	2.50	23.00	1.75	3.250	.340	1.25	1.937	16.250
-16	16	#12	2.50	26.25	1.75	3.250	.340	1.25	1.937	19.500
-18	18	#12	2.50	29.50	1.75	3.250	.340	1.25	1.937	22.750
-20	20	#12	2.50	32.75	1.75	3.250	.340	1.25	1.937	26.000

#16 SAE

JUNCTION BLOCK - PART NO. J 16 -

Dash No.	A Ports	A SAE	C	D	E	F	G DIA.	H	J	K
-4	4	#16	3.00	7.37	1.81	3.750	.340	1.50	2.375	.000
-6	6	#16	3.00	11.12	1.81	3.750	.340	1.50	2.375	3.750
-8	8	#16	3.00	14.87	1.81	3.750	.340	1.50	2.375	7.500
-10	10	#16	3.00	18.62	1.81	3.750	.340	1.50	2.375	11.250
-12	12	#16	3.00	22.37	1.81	3.750	.340	1.50	2.375	15.000
-14	14	#16	3.00	26.12	1.81	3.750	.340	1.50	2.375	18.750
-16	16	#16	3.00	29.87	1.81	3.750	.340	1.50	2.375	22.500
-18	18	#16	3.00	33.62	1.81	3.750	.340	1.50	2.375	26.250
-20	20	#16	3.00	37.37	1.81	3.750	.340	1.50	2.375	30.000

#20 SAE

JUNCTION BLOCK - PART NO. J 20 -

Dash No.	A Ports	A SAE	C	D	E	F	G DIA.	H	J	K
-4	4	#20	3.50	8.50	2.25	4.000	.530	1.75	2.687	.000
-6	6	#20	3.50	12.50	2.25	4.000	.530	1.75	2.687	4.000
-8	8	#20	3.50	16.50	2.25	4.000	.530	1.75	2.687	8.000
-10	10	#20	3.50	20.50	2.25	4.000	.530	1.75	2.687	12.000
-12	12	#20	3.50	24.50	2.25	4.000	.530	1.75	2.687	16.000
-14	14	#20	3.50	28.50	2.25	4.000	.530	1.75	2.687	20.000
-16	16	#20	3.50	32.50	2.25	4.000	.530	1.75	2.687	24.000

#24 SAE

JUNCTION BLOCK - PART NO. J 24 -

Dash No.	A Ports	A SAE	C	D	E	F	G DIA.	H	J	K
-4	4	#24	4.00	10.00	2.50	5.000	.530	.20	3.187	.000
-6	6	#24	4.00	15.00	2.50	5.000	.530	.20	3.187	5.000
-8	8	#24	4.00	20.00	2.50	5.000	.530	.20	3.187	10.000
-10	10	#24	4.00	25.00	2.50	5.000	.530	.20	3.187	15.000
-12	12	#24	4.00	30.00	2.50	5.000	.530	.20	3.187	20.000

RIGHT ANGLE JUNCTION BLOCKS - SAE PORTING

Requirements not listed are quoted upon request.

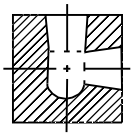

SECTION *X - X*

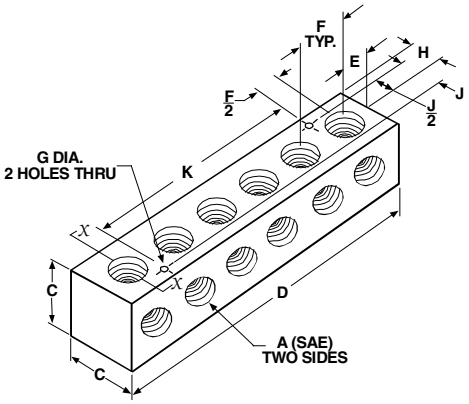

SAE PORTING IN/OUT

#4 SAE

RIGHT ANGLE JUNCTION BLOCK - PART NO. RAJ 4 -

Dash No.	A Ports	A SAE	C	D	E	F	G DIA.	H	J	K
-4	4	#4	1.50	3.87	1.06	1.750	.280	.75	1.062	.000
-6	6	#4	1.50	5.62	1.06	1.750	.280	.75	1.062	1.750
-8	8	#4	1.50	7.37	1.06	1.750	.280	.75	1.062	3.500
-10	10	#4	1.50	9.12	1.06	1.750	.280	.75	1.062	5.250
-12	12	#4	1.50	10.87	1.06	1.750	.280	.75	1.062	7.000
-14	14	#4	1.50	12.62	1.06	1.750	.280	.75	1.062	8.750
-16	16	#4	1.50	14.37	1.06	1.750	.280	.75	1.062	10.000
-18	18	#4	1.50	16.12	1.06	1.750	.280	.75	1.062	12.250
-20	20	#4	1.50	17.87	1.06	1.750	.280	.75	1.062	14.000
-22	22	#4	1.50	19.62	1.06	1.750	.280	.75	1.062	15.750
-24	24	#4	1.50	21.37	1.06	1.750	.280	.75	1.062	17.500

#6 SAE

RIGHT ANGLE JUNCTION BLOCK - PART NO. RAJ 6 -

Dash No.	A Ports	A SAE	C	D	E	F	G DIA.	H	J	K
-4	4	#6	1.75	4.50	1.25	2.000	.280	.87	1.312	.000
-6	6	#6	1.75	6.50	1.25	2.000	.280	.87	1.312	2.000
-8	8	#6	1.75	8.50	1.25	2.000	.280	.87	1.312	4.000
-10	10	#6	1.75	10.50	1.25	2.000	.280	.87	1.312	6.000
-12	12	#6	1.75	12.50	1.25	2.000	.280	.87	1.312	8.000
-14	14	#6	1.75	14.50	1.25	2.000	.280	.87	1.312	10.000
-16	16	#6	1.75	16.50	1.25	2.000	.280	.87	1.312	12.000
-18	18	#6	1.75	18.50	1.25	2.000	.280	.87	1.312	14.000
-20	20	#6	1.75	20.50	1.25	2.000	.280	.87	1.312	16.000
-22	22	#6	1.75	22.50	1.25	2.000	.280	.87	1.312	18.000
-24	24	#6	1.75	24.50	1.25	2.000	.280	.87	1.312	20.000

#8 SAE

RIGHT ANGLE JUNCTION BLOCK - PART NO. RAJ 8 -

Dash No.	A Ports	A SAE	C	D	E	F	G DIA.	H	J	K
-4	4	#8	2.00	5.37	1.50	2.370	.280	1.00	1.562	.000
-6	6	#8	2.00	7.75	1.50	2.370	.280	1.00	1.562	2.375
-8	8	#8	2.00	10.12	1.50	2.370	.280	1.00	1.562	4.750
-10	10	#8	2.00	12.50	1.50	2.370	.280	1.00	1.562	7.125
-12	12	#8	2.00	14.87	1.50	2.370	.280	1.00	1.562	9.500
-14	14	#8	2.00	17.25	1.50	2.370	.280	1.00	1.562	11.875
-16	16	#8	2.00	19.62	1.50	2.370	.280	1.00	1.562	14.250
-18	18	#8	2.00	22.00	1.50	2.370	.280	1.00	1.562	16.625
-20	20	#8	2.00	24.37	1.50	2.370	.280	1.00	1.562	19.000
-22	22	#8	2.00	26.75	1.50	2.370	.280	1.000	1.562	21.000
-24	24	#8	2.00	29.12	1.50	2.370	.280	1.00	1.562	23.375

SAE PORTING IN/OUT

#12 SAE

RIGHT ANGLE JUNCTION BLOCK - PART NO. RAJ 12 -

Dash No.	A Ports	A SAE	C	D	E	F	G DIA.	H	J	K
-4	4	#12	2.50	6.37	1.75	3.250	.340	1.25	1.937	.000
-6	6	#12	2.50	10.00	1.75	3.250	.340	1.25	1.937	3.250
-8	8	#12	2.50	13.25	1.75	3.250	.340	1.25	1.937	6.500
-10	10	#12	2.50	16.50	1.75	3.250	.340	1.25	1.937	9.750
-12	12	#12	2.50	19.75	1.75	3.250	.340	1.25	1.937	13.000
-14	14	#12	2.50	23.00	1.75	3.250	.340	1.25	1.937	16.250
-16	16	#12	2.50	26.25	1.75	3.250	.340	1.25	1.937	19.500
-18	18	#12	2.50	29.50	1.75	3.250	.340	1.25	1.937	22.750
-20	20	#12	2.50	32.75	1.75	3.250	.340	1.25	1.937	26.000

#16 SAE

RIGHT ANGLE JUNCTION BLOCK - PART NO. RAJ 16 -

Dash No.	A Ports	A SAE	C	D	E	F	G DIA.	H	J	K
-4	4	#16	3.00	7.37	1.81	3.750	.340	1.50	2.375	.000
-6	6	#16	3.00	11.12	1.81	3.750	.340	1.50	2.375	3.750
-8	8	#16	3.00	14.87	1.81	3.750	.340	1.50	2.375	7.500
-10	10	#16	3.00	18.62	1.81	3.750	.340	1.50	2.375	11.250
-12	12	#16	3.00	22.37	1.81	3.750	.340	1.50	2.375	15.250
-14	14	#16	3.00	26.12	1.81	3.750	.340	1.50	2.375	18.750
-16	16	#16	3.00	29.87	1.81	3.750	.340	1.50	2.375	22.500
-18	18	#16	3.00	33.62	1.81	3.750	.340	1.50	2.375	26.250
-20	20	#16	3.00	37.37	1.81	3.750	.340	1.50	2.375	30.000

#20 SAE

RIGHT ANGLE JUNCTION BLOCK - PART NO. RAJ 20 -

Dash No.	A Ports	A SAE	C	D	E	F	G DIA.	H	J	K
-4	4	#20	3.50	8.50	2.25	4.000	.530	1.75	2.687	.000
-6	6	#20	3.50	12.50	2.25	4.000	.530	1.75	2.687	4.000
-8	8	#20	3.50	16.50	2.25	4.000	.530	1.75	2.687	8.000
-10	10	#20	3.50	20.50	2.25	4.000	.530	1.75	2.687	12.000
-12	12	#20	3.50	24.50	2.25	4.000	.530	1.75	2.687	16.000
-14	14	#20	3.50	28.50	2.25	4.000	.530	1.75	2.687	20.000
-16	16	#20	3.50	32.50	2.25	4.000	.530	1.75	2.687	24.000

#24 SAE

RIGHT ANGLE JUNCTION BLOCK - PART NO. RAJ 24 -

Dash No.	A Ports	A SAE	C	D	E	F	G DIA.	H	J	K
-4	4	#24	4.00	10.00	2.50	5.000	.530	.20	3.187	.000
-6	6	#24	4.00	15.00	2.50	5.000	.530	.20	3.187	5.000
-8	8	#24	4.00	20.00	2.50	5.000	.530	.20	3.187	10.000
-10	10	#24	4.00	25.00	2.50	5.000	.530	.20	3.187	15.000
-12	12	#24	4.00	30.00	2.50	5.000	.530	.20	3.187	20.000

TERMINAL TEE BLOCKS - SAE PORTING

Requirements not listed are quoted upon request.

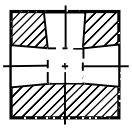

SECTION *X - X*

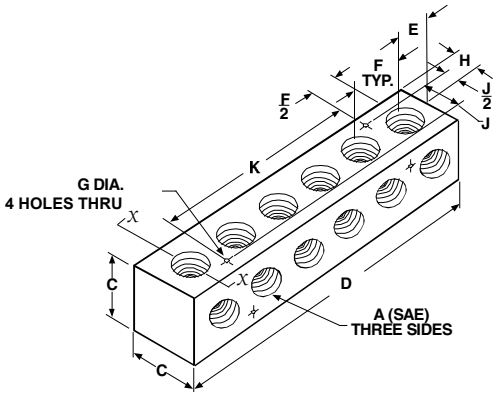

SAE PORTING IN/OUT

#4 SAE

TERMINAL TEE BLOCK - PART NO. TT 4 -

Dash No.	A Ports	A SAE	C	D	E	F	G DIA.	H	J	K
-6	6	#4	1.50	3.87	1.06	1.750	.280	.75	1.062	.000
-9	9	#4	1.50	5.62	1.06	1.750	.280	.75	1.062	1.750
-12	12	#4	1.50	7.37	1.06	1.750	.280	.75	1.062	3.500
-15	15	#4	1.50	9.12	1.06	1.750	.280	.75	1.062	5.250
-18	18	#4	1.50	10.87	1.06	1.750	.280	.75	1.062	7.000
-21	21	#4	1.50	12.62	1.06	1.750	.280	.75	1.062	8.750
-24	24	#4	1.50	14.37	1.06	1.750	.280	.75	1.062	10.000
-27	27	#4	1.50	16.12	1.06	1.750	.280	.75	1.062	12.250
-30	30	#4	1.50	17.87	1.06	1.750	.280	.75	1.062	14.000
-33	33	#4	1.50	19.62	1.06	1.750	.280	.75	1.062	15.750
-36	36	#4	1.50	21.37	1.06	1.750	.280	.75	1.062	17.500

#6 SAE

TERMINAL TEE BLOCK - PART NO. TT 6 -

Dash No.	A Ports	A SAE	C	D	E	F	G DIA.	H	J	K
-6	6	#6	1.75	4.50	1.25	2.000	2.80	.87	1.312	.000
-9	9	#6	1.75	6.50	1.25	2.000	2.80	.87	1.312	2.000
-12	12	#6	1.75	8.50	1.25	2.000	2.80	.87	1.312	4.000
-15	15	#6	1.75	10.50	1.25	2.000	2.80	.87	1.312	6.000
-18	18	#6	1.75	12.50	1.25	2.000	2.80	.87	1.312	8.000
-21	21	#6	1.75	14.50	1.25	2.000	2.80	.87	1.312	10.000
-24	24	#6	1.75	16.50	1.25	2.000	2.80	.87	1.312	12.000
-27	27	#6	1.75	18.50	1.25	2.000	2.80	.87	1.312	14.000
-30	30	#6	1.75	20.50	1.25	2.000	2.80	.87	1.312	18.000
-33	33	#6	1.75	22.50	1.25	2.000	2.80	.87	1.312	20.000
-36	36	#6	1.75	24.50	1.25	2.000	2.80	.87	1.312	22.000

#8 SAE

TERMINAL TEE BLOCK - PART NO. TT 8 -

Dash No.	A Ports	A SAE	C	D	E	F	G DIA.	H	J	K
-6	6	#8	2.00	5.37	1.50	2.375	.280	1.00	1.562	.000
-9	9	#8	2.00	7.75	1.50	2.375	.280	1.00	1.562	2.375
-12	12	#8	2.00	10.12	1.50	2.375	.280	1.00	1.562	4.750
-15	15	#8	2.00	12.50	1.50	2.375	.280	1.00	1.562	7.125
-18	18	#8	2.00	14.87	1.50	2.375	.280	1.00	1.562	9.500
-21	21	#8	2.00	17.25	1.50	2.375	.280	1.00	1.562	11.875
-24	24	#8	2.00	19.62	1.50	2.375	.280	1.00	1.562	14.250
-27	27	#8	2.00	22.00	1.50	2.375	.280	1.00	1.562	16.625
-30	30	#8	2.00	24.37	1.50	2.375	.280	1.00	1.562	19.000
-33	33	#8	2.00	26.75	1.50	2.375	.280	1.00	1.562	21.375
-36	36	#8	2.00	29.12	1.50	2.375	.280	1.00	1.562	23.750

SAE PORTING IN/OUT

#12 SAE

TERMINAL TEE BLOCK - PART NO. TT 12 -

Dash No.	A Ports	A SAE	C	D	E	F	G DIA.	H	J	K
-6	6	#12	2.50	6.75	1.75	3.250	.340	1.25	1.937	.000
-9	9	#12	2.50	10.00	1.75	3.250	.340	1.25	1.937	3.250
-12	12	#12	2.50	13.25	1.75	3.250	.340	1.25	1.937	6.500
-15	15	#12	2.50	16.50	1.75	3.250	.340	1.25	1.937	9.750
-18	18	#12	2.50	19.75	1.75	3.250	.340	1.25	1.937	13.000
-21	21	#12	2.50	23.00	1.75	3.250	.340	1.25	1.937	16.250
-24	24	#12	2.50	26.25	1.75	3.250	.340	1.25	1.937	19.500
-27	27	#12	2.50	29.50	1.75	3.250	.340	1.25	1.937	22.750
-30	30	#12	2.50	32.75	1.75	3.250	.340	1.25	1.937	26.000

#16 SAE

TERMINAL TEE BLOCK - PART NO. TT 16 -

Dash No.	A Ports	A SAE	C	D	E	F	G DIA.	H	J	K
-6	6	#16	3.00	7.37	1.81	3.750	.340	1.50	2.375	.000
-9	9	#16	3.00	11.12	1.81	3.750	.340	1.50	2.375	3.750
-12	12	#16	3.00	14.87	1.81	3.750	.340	1.50	2.375	7.500
-15	15	#16	3.00	18.62	1.81	3.750	.340	1.50	2.375	11.250
-18	18	#16	3.00	22.37	1.81	3.750	.340	1.50	2.375	15.000
-21	21	#16	3.00	26.12	1.81	3.750	.340	1.50	2.375	18.750
-24	24	#16	3.00	29.87	1.81	3.750	.340	1.50	2.375	22.500
-27	27	#16	3.00	33.62	1.81	3.750	.340	1.50	2.375	26.250
-30	30	#16	3.00	37.37	1.81	3.750	.340	1.50	2.375	30.000

#20 SAE

TERMINAL TEE BLOCK - PART NO. TT 20 -

Dash No.	A Ports	A SAE	C	D	E	F	G DIA.	H	J	K
-6	6	#20	3.50	8.50	2.25	4.000	.530	1.75	2.687	.000
-9	9	#20	3.50	12.50	2.25	4.000	.530	1.75	2.687	4.000
-12	12	#20	3.50	16.50	2.25	4.000	.530	1.75	2.687	8.000
-15	15	#20	3.50	20.50	2.25	4.000	.530	1.75	2.687	12.000
-18	18	#20	3.50	24.50	2.25	4.000	.530	1.75	2.687	16.000
-21	21	#20	3.50	28.50	2.25	4.000	.530	1.75	2.687	20.000
-24	24	#20	3.50	32.50	2.25	4.000	.530	1.75	2.687	24.000

#24 SAE

TERMINAL TEE BLOCK - PART NO. TT 24 -

Dash No.	A Ports	A SAE	C	D	E	F	G DIA.	H	J	K
-6	6	#24	4.00	10.00	2.50	5.000	.530	2.00	3.187	.000
-9	9	#24	4.00	15.00	2.50	5.000	.530	2.00	3.187	5.000
-12	12	#24	4.00	20.00	2.50	5.000	.530	2.00	3.187	10.000
-15	15	#24	4.00	25.00	2.50	5.000	.530	2.00	3.187	15.000
-18	18	#24	4.00	30.00	2.50	5.000	.530	2.00	3.187	20.000